FAN AND FILTER



Introduction To Fan And Filter Classification

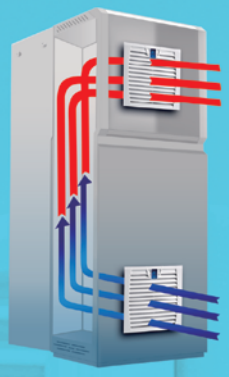

Low noise | Energy saving | Water proofing | Copper motor | High Air-flow | Fast installation



with EMC function

1. LK32 series

Easy-open buckle



Power supply working indicator option





2. LK66 series

Straight line grill design



High quality waterproofsealing ring





3. FF series

Standard material PC+Alloy, UV resistance



Corrugated filter mat option





4. FK55 series

Thinner cover



Curve line grill design





5. FU series

Flexible fan size by embedded nuts

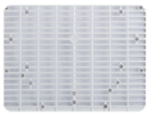

Air duct optional





6. FK series

Easy-open structure,quicker maintenance of filter mat

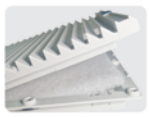

Flexible fan size by embedded nuts

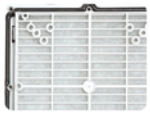



LK3237 series FAN-AND-FILTER



LK3237 .230



LK3237 .300



IP54 CE RoHS COMPLIANT -30 +70 °C

SPECIFICATION

Fan filter model	LK3237.230	LK3237.115	LK3237.024
Rated voltage	200-240V AC	100-125V AC	24V DC
Rated frequency	50/60Hz	50/60Hz	—
Air flow rate, free blowing	28/38m³/h	28/38m³/h	38m³/h
Air flow rate, Equipped with standard filter mat	1 x LK3237.300: 20/25m³/h		
Axial flow fan	Self starting shaded pole motor		
Rated current	0.07A/0.06A	0.12A/0.11A	0.08A
Power	12/11W	12/11W	1.92W
Noise level	37/41dB(A)	37/41dB(A)	41dB(A)
Operating temperature range	-30°C ~ +70°C	-30°C ~ +70°C	-30°C ~ +70°C
Outlet filter model	LK3237.300	LK3237.300	LK3237.300
Material	Thermoplastic, UL94 V-0 (optional)		
Air flow direction	Air-in as standard; air-out optional		



Power Supply Work Indicator (optional)



Easy Replacement of Filter Pad



Different Colors Can Be Customized

DIMENSION (mm)

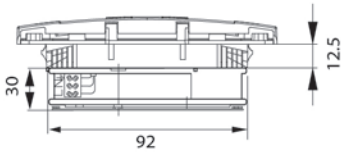



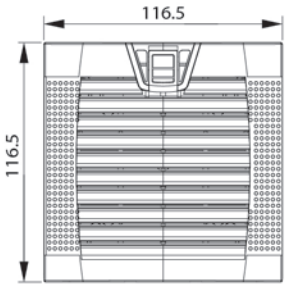

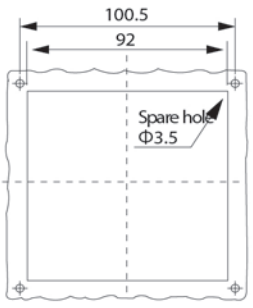

Data page for ref only ,
details & doubts please email: info@linkwell.org

FAN-AND-FILTER LK3238 series



LK3238 .230



LK3238 .300



IP54 CE RoHS COMPLIANT -30 +70 °C

SPECIFICATION

Fan filter model	LK3238.230	LK3238.115	LK3238.024
Rated voltage	200-240V AC	100-125V AC	24V DC
Rated frequency	50/60Hz	50/60Hz	—
Air flow rate, free blowing	65/85m³/h	65/85m³/h	100m³/h
Air flow rate, Equipped with standard filter mat	1 x LK3238.300: 55/70m³/h		
Axial flow fan	Self starting shaded pole motor		
Rated current	0.12A/0.11A	0.24A/0.22A	0.2A
Power	19/18W	19/18W	4.8W
Noise level	41/42dB(A)	41/42dB(A)	41dB(A)
Operating temperature range	-30°C ~ +70°C	-30°C ~ +70°C	-30°C ~ +70°C
Outlet filter model	LK3238.300	LK3238.300	LK3238.300
Material	Thermoplastic, UL94 V-0 (optional)		
Air flow direction	Air-in as standard; air-out optional		



Power Supply Work Indicator (optional)



Easy Replacement of Filter Pad



Different Colors Can Be Customized

DIMENSION (mm)

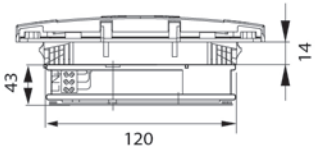



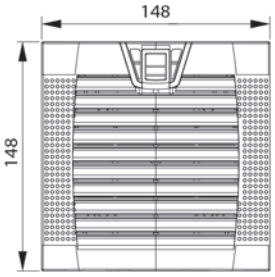

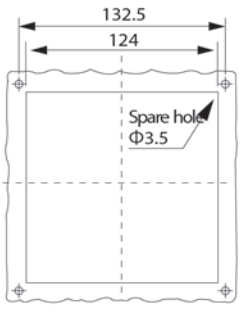

LK3239 series FAN-AND-FILTER



LK3239 .230



LK3239 .300



IP54 CE RoHS COMPLIANT -30 +70 °C

SPECIFICATION

Fan filter model	LK3239.230	LK3239.115	LK3239.024
Rated voltage	200-240V AC	100-125V AC	24V DC
Rated frequency	50/60Hz	50/60Hz	—
Air flow rate, free blowing	105/126m³/h	105/126m³/h	126m³/h
Air flow rate, Equipped with standard filter mat	1×LK3239.300:78/90m³/h		
Axial flow fan	Self starting shaded pole motor		
Rated current	0.12A/0.11A	0.24A/0.22A	0.2A
Power	19/18W	19/18W	4.8W
Noise level	41/42dB(A)	41/42dB(A)	41dB(A)
Operating temperature range	-30°C ~ +70°C	-30°C ~ +70°C	-30°C ~ +70°C
Outlet filter model	LK3239.300	LK3239.300	LK3239.300
Material	Thermoplastic, UL94 V-0 (optional)		
Air flow direction	Air-in as standard; air-out optional		



Power Supply Work Indicator (optional)



Easy Replacement of Filter Pad



Different Colors Can Be Customized

DIMENSION (mm)

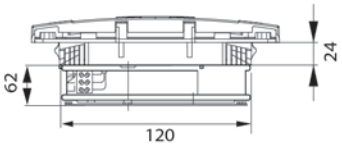



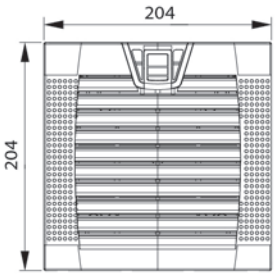

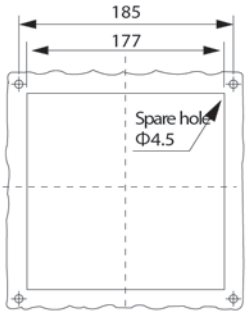

FAN-AND-FILTER LK3240-P series



LK3240-P .230



LK3240 .300



IP54 CE RoHS COMPLIANT -30 +70 °C

SPECIFICATION

Fan filter model	LK3240-P.230	LK3240-P.115	LK3240.024
Rated voltage	200-240V AC	100-125V AC	24V DC
Rated frequency	50/60Hz	50/60 Hz	—
Air flow rate, free blowing	220/240m³/h	220/240m³/h	300m³/h
Air flow rate, Equipped with standard filter mat	1×LK3240.300:155/185m³/h		
Axial flow fan	Self starting shaded pole motor		
Rated current	0.24A/0.22A	0.45A/0.42A	0.5A
Power	38/36W	38/36W	12W
Noise level	50/52dB(A)	50/52dB(A)	50dB(A)
Operating temperature range	-30°C ~ +70°C	-30°C ~ +70°C	-30°C ~ +70°C
Outlet filter model	LK3240.300	LK3240.300	LK3240.300
Material	Thermoplastic, UL94 V-0 (optional)		
Air flow direction	Air-in as standard; air-out optional		



Power Supply Work Indicator (optional)



Easy Replacement of Filter Pad



Different Colors Can Be Customized

DIMENSION (mm)

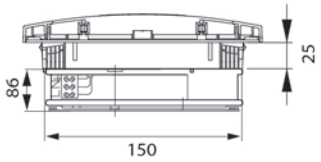



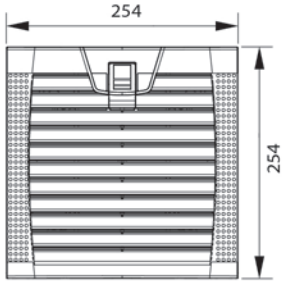

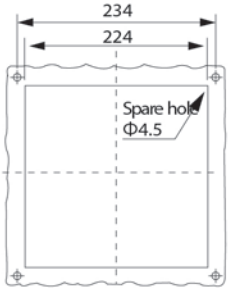

LK3240-M series FAN-AND-FILTER



LK3240-M .230



LK3240 .300



IP54 CE RoHS COMPLIANT -30 +70 °C

SPECIFICATION

Fan filter model	LK3240-M.230	LK3240-M.115
Rated voltage	200-240V AC	100-125V AC
Rated frequency	50/60Hz	50/60Hz
Air flow rate, free blowing	230/265m³/h	230/265m³/h
Air flow rate, Equipped with standard filter mat	1×LK3240.300:190/215m³/h	
Axial flow fan	Self starting shaded pole motor	
Rated current	0.22A/0.20A	0.45A/0.5A
Power	37/35W	37/35W
Noise level	50/52dB(A)	50/52dB(A)
Operating temperature range	-30°C ~ +70°C	-30°C ~ +70°C
Outlet filter model	LK3240.300	LK3240.300
Material	Thermoplastic, UL94 V-0 (optional)	
Air flow direction	Air-in as standard; air-out optional	



Power Supply Work Indicator (optional)



Easy Replacement of Filter Pad



Different Colors Can Be Customized

DIMENSION (mm)

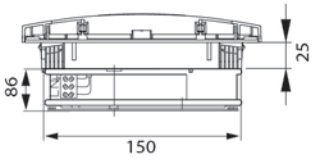



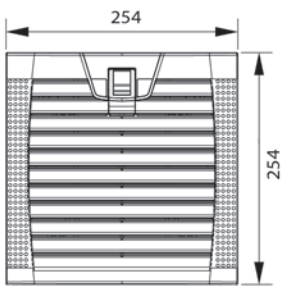

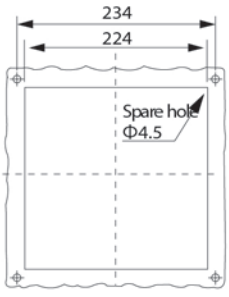

FAN-AND-FILTER LK3242 series



LK3242 .230



LK3242 .300



IP54 CE RoHS COMPLIANT -30 +70 °C

SPECIFICATION

Fan filter model	LK3242.230	LK3242.115
Rated voltage	200V-240V AC	100-125V AC
Rated frequency	50/60Hz	50/60Hz
Air flow rate, free blowing	550/600m³/h	550/600m³/h
Air flow rate, Equipped with standard filter mat	1×LK3243.300:380/410m³/h	
Axial flow fan	Capacitor operated	
Rated current	0.30A/0.35A	0.55A/0.65A
Power	55/65W	55/65W
Noise level	62/65dB(A)	62/65dB(A)
Operating temperature range	-40°C ~ +80°C	-40°C ~ +80°C
Outlet filter model	LK3243.300	LK3243.300
Material	Thermoplastic, UL94 V-0 (optional)	
Air flow direction	Air-out as standard; air-in optional	



Power Supply Work Indicator (optional)



Easy Replacement of Filter Pad



Different Colors Can Be Customized

DIMENSION (mm)

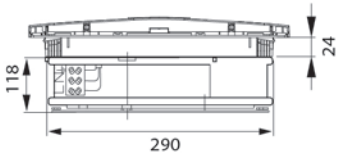



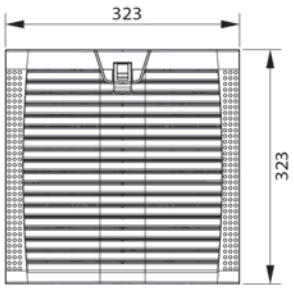

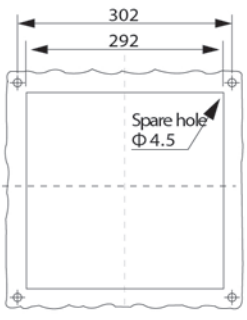

LK3243 series FAN-AND-FILTER



LK3243 .230



LK3243 .300



IP54 CE RoHS COMPLIANT -30 +70 °C

SPECIFICATION

Fan filter model	LK3243.230	LK3243.115
Rated voltage	200-240V AC	100-125V AC
Rated frequency	50/60Hz	50/60Hz
Air flow rate, free blowing	1150/1350m³/h	1150/1350m³/h
Air flow rate, Equipped with standard filter mat	1×LK3243.300:750/950m³/h	
Axial flow fan	Capacitor operated	
Rated current	0.52A/0.65A	1.0A/1.1A
Power	110/120W	110/120W
Noise level	70/72dB(A)	70/72dB(A)
Operating temperature range	-30°C ~ +70°C	-30°C ~ +70°C
Outlet filter model	LK3243.300	LK3243.300
Material	Thermoplastic, UL94 V-0 (optional)	
Air flow direction	Air-out as standard; air-in optional	



Power Supply Work Indicator (optional)



Easy Replacement of Filter Pad



Different Colors Can Be Customized

DIMENSION (mm)

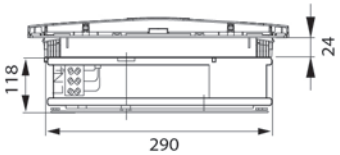



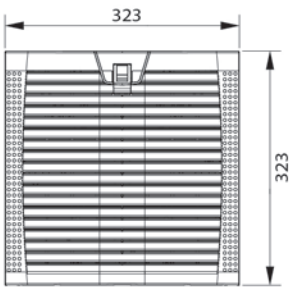

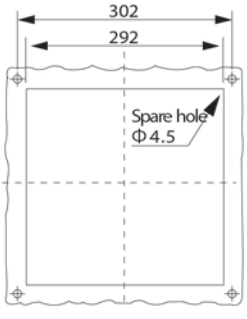

FAN-AND-FILTER LK3244 series



LK3244 .230



LK3243 .300



IP54 CE RoHS COMPLIANT -30 +70 °C

SPECIFICATION

Fan filter model	LK3244.230	LK3244.115
Rated voltage	200-240V AC	100-125V AC
Rated frequency	50/60Hz	50/60Hz
Air flow rate, free blowing	550/600m³/h	550/600m³/h
Air flow rate, Equipped with standard filter mat	1×LK3243.300:380/410m³/h	
Axial flow fan	Capacitor operated	
Rated current	0.30A/0.35A	0.55/0.65A
Power	55/65W	55/65W
Noise level	59/61dB(A)	59/61dB(A)
Operating temperature range	-30°C ~ +70°C	-30°C ~ +70°C
Outlet filter model	LK3243.300	LK3243.300
Material	Thermoplastic, UL94 V-0 (optional)	
Air flow direction	Air-in as standard; air-out optional	



Power Supply Work Indicator (optional)



Easy Replacement of Filter Pad



Different Colors Can Be Customized

DIMENSION (mm)

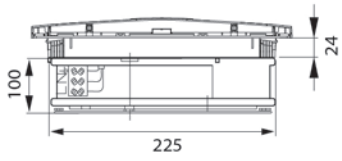



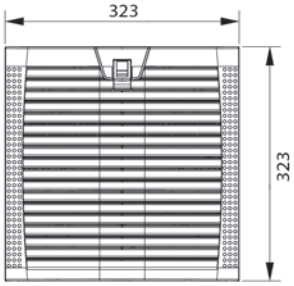

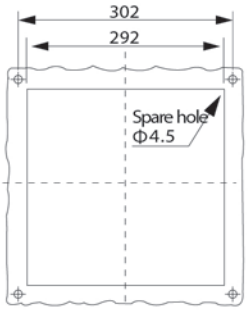

LK3245 series FAN-AND-FILTER



LK3245 .230



LK3243 .300



IP54 CE RoHS COMPLIANT -30 +70 °C

SPECIFICATION

Fan filter model	LK3245.230	LK3245.115
Rated voltage	200-240V AC	100-125V AC
Rated frequency	50/60Hz	50/60Hz
Air flow rate, free blowing	1150/1350m³/h	1150/1350m³/h
Air flow rate, Equipped with standard filter mat	1×LK3243.300:790/950m³/h	
Axial flow fan	Capacitor operated	
Rated current	0.55A/0.65A	1.0/1.1A
Power	110/150W	110/150W
Noise level	68/71dB(A)	68/71dB(A)
Operating temperature range	-30°C ~ +70°C	-30°C ~ +70°C
Outlet filter model	LK3243.300	LK3243.300
Material	Thermoplastic, UL94 V-0 (optional)	
Air flow direction	Air-in as standard; air-out optional	



Power Supply Work Indicator (optional)



Easy Replacement of Filter Pad



Different Colors Can Be Customized

DIMENSION (mm)

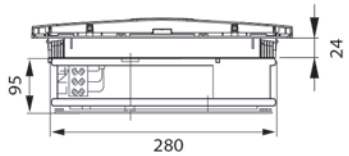



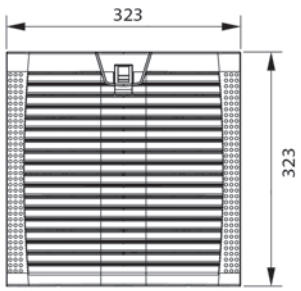

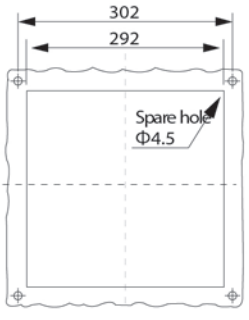



LK6621 .230



LK6621 .300



IP54 CE RoHS COMPLIANT -30 +70 °C

SPECIFICATION

Fan filter model	LK6621.230	LK6621.115	LK6621.024
Rated voltage	200-240V AC	100-125V AC	24V DC
Rated frequency	50/60 Hz	50/60 Hz	—
Air flow rate, free blowing	28/38 m^3/h	28/38 m^3/h	38 m^3/h
Air flow rate, Equipped with standard filter mat	1×LK6621.300:20/25 m^3/h		
Axial flow fan	Self starting shaded pole motor		
Rated current	0.07A/0.06A	0.12A/0.11A	0.08A
Power	12/11W	12/11W	1.92W
Noise level	37/41dB(A)	37/41dB(A)	41dB(A)
Operating temperature range	-30°C ~ +70°C	-30°C ~ +70°C	-30°C ~ +70°C
Outlet filter model	LK6621.300	LK6621.300	LK6621.300
Material	Thermoplastic, UL94 V-0 (optional)		
Air flow direction	Air-in as standard; air-out optional		



Straight Line Grill Design



Thinner Cover



Premium Sealing Gasket

DIMENSION (mm)

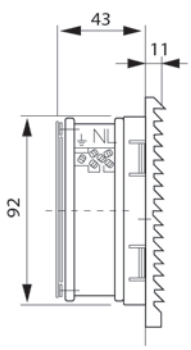

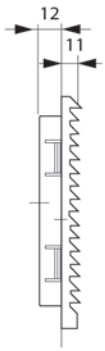



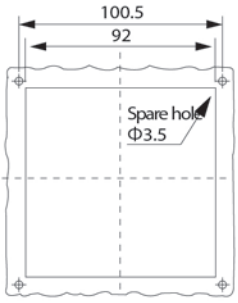



LK6622 .230



LK6622 .300



IP54 CE RoHS COMPLIANT -30 +70 °C

SPECIFICATION

Fan filter model	LK6622.230	LK6622.115	LK6622.024
Rated voltage	200-240V AC	100-125V AC	24V DC
Rated frequency	50/60 Hz	50/60 Hz	—
Air flow rate, free blowing	65/85 m^3/h	65/85 m^3/h	100 m^3/h
Air flow rate, Equipped with standard filter mat	1×LK6622.300:55/70 m^3/h		
Axial flow fan	Self starting shaded pole motor		
Rated current	0.12A/0.11A	0.24A/0.22A	0.20A
Power	19/18W	19/18W	4.8W
Noise level	41/42dB(A)	41/42dB(A)	41dB(A)
Operating temperature range	-30°C ~ +70°C	-30°C ~ +70°C	-30°C ~ +70°C
Outlet filter model	LK6622.300	LK6622.300	LK6622.300
Material	Thermoplastic, UL94 V-0 (optional)		
Air flow direction	Air-in as standard; air-out optional		



Straight Line Grill Design



Thinner Cover



Premium Sealing Gasket

DIMENSION (mm)

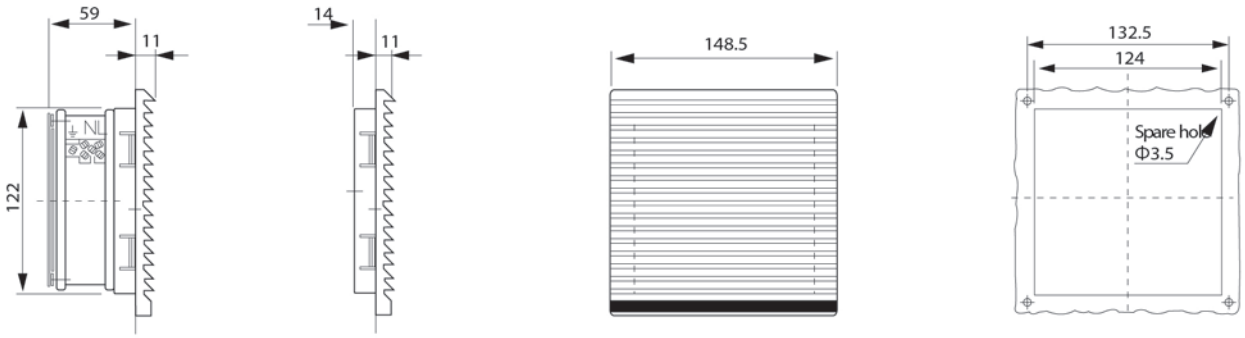

FAN-AND-FILTER LK6623 series



LK6623 .230



LK6623 .300



IP54 CE RoHS COMPLIANT -30 +70 °C

SPECIFICATION

Fan filter model	LK6623.230	LK6623.115	LK6623.024
Rated voltage	200-240V AC	100-125V AC	24V DC
Rated frequency	50/60Hz	50/60Hz	—
Air flow rate, free blowing	105/126m³/h	105/126m³/h	126m³/h
Air flow rate, Equipped with standard filter mat	1×LK6623.300:78/90m³/h		
Axial flow fan	Self starting shaded pole motor		
Rated current	0.12A/0.11A	0.24A/0.22A	0.20A
Power	19/18W	19/18W	4.8W
Noise level	41/42dB(A)	41/42dB(A)	41dB(A)
Operating temperature range	-30°C ~ +70°C	-30°C ~ +70°C	-30°C ~ +70°C
Outlet filter model	LK6623.300	LK6623.300	LK6623.300
Material	Thermoplastic, UL94 V-0 (optional)		
Air flow direction	Air-in as standard; air-out optional		



Straight Line Grill Design



Thinner Cover



Premium Sealing Gasket

DIMENSION (mm)

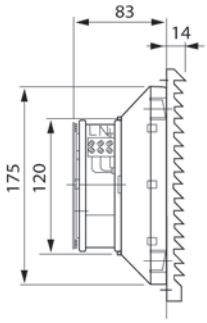

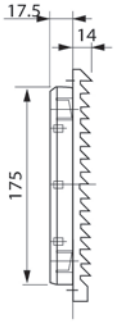



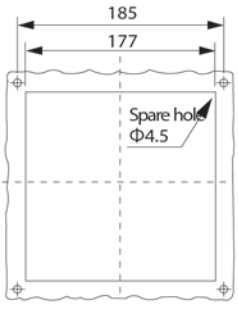



LK6624 .230



LK6624 .300



IP54 CE RoHS COMPLIANT -30 +70 °C

SPECIFICATION

Fan filter model	LK6624.230	LK6624.115	LK6624.024
Rated voltage	200V-240V AC	100-125V AC	24V DC
Rated frequency	50/60Hz	50/60Hz	—
Air flow rate, free blowing	220/240m³/h	220/240m³/h	300m³/h
Air flow rate, Equipped with standard filter mat	1×LK6624.300:155/185m³/h		
Axial flow fan	Self starting shaded pole motor		
Rated current	0.24A/0.22A	0.45A/0.42A	0.80A
Power	38/36W	38/36W	19.2W
Noise level	50/52dB(A)	50/52dB(A)	50dB(A)
Operating temperature range	-30°C ~ +70°C	-30°C ~ +70°C	-30°C ~ +70°C
Outlet filter model	LK6624.300	LK6624.300	LK6624.300
Material	Thermoplastic, UL94 V-0 (optional)		
Air flow direction	Air-in as standard; air-out optional		



Straight Line Grill Design



Thinner Cover



Premium Sealing Gasket

DIMENSION (mm)

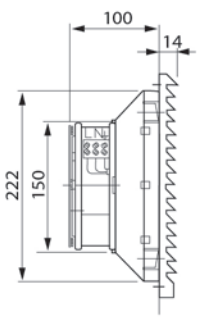

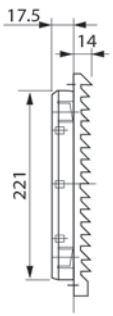



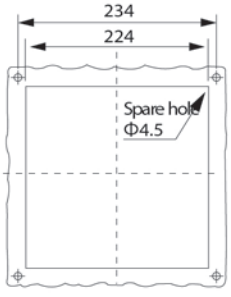

FAN-AND-FILTER LK6625 series



LK6625 .230



LK6625 .300



IP54 CE RoHS COMPLIANT -30 +70 ℃

SPECIFICATION

Fan filter model	LK6625.230	LK6625.115
Rated voltage	200V-240V AC	100-125V AC
Rated frequency	50/60Hz	50/60Hz
Air flow rate, free blowing	230/265m³/h	230/265m³/h
Air flow rate, Equipped with standard filter mat	1×LK6625.300:190/215m³/h	
Axial flow fan	Capacitor operated	
Rated current	0.22A/0.20A	0.45A/0.50A
Power	37/35W	37/35W
Noise level	50/52dB(A)	50/52dB(A)
Operating temperature range	-30℃ ~ +70℃	-30℃ ~ +70℃
Outlet filter model	LK6625.300	LK6625.300
Material	Thermoplastic, UL94 V-0 (optional)	
Air flow direction	Air-in as standard; air-out optional	



Straight Line Grill Design



Thinner Cover



Premium Sealing Gasket

DIMENSION (mm)

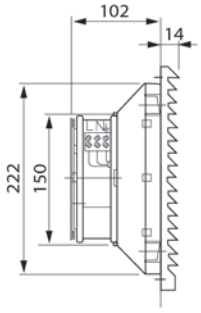

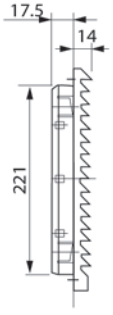



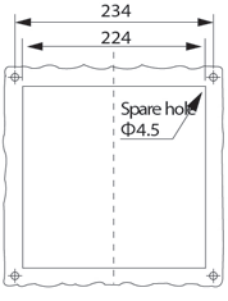

LK6625-D series FAN-AND-FILTER



LK6625-D .230



LK6624 .300



IP54 CE RoHS COMPLIANT -30 +70 °C

SPECIFICATION

Fan filter model	LK6625-D.230	LK6625-D.115
Rated voltage	200V-240V AC	100-125V AC
Rated frequency	50/60Hz	50/60Hz
Air flow rate, free blowing	330/370m³/h	330/370m³/h
Air flow rate, Equipped with standard filter mat	1×LK6625.300:230/260m³/h	
Axial flow fan	Capacitor operated	
Rated current	0.35A/0.32A	0.54A/0.52A
Power	42/40W	42/40W
Noise level	60dB(A)	60dB(A)
Operating temperature range	-30°C ~ +70°C	-30°C ~ +70°C
Outlet filter model	LK6625.300	LK6625.300
Material	Thermoplastic, UL94 V-0 (optional)	
Air flow direction	Air-in as standard; air-out optional	



Straight Line Grill Design



Thinner Cover



Premium Sealing Gasket

DIMENSION (mm)

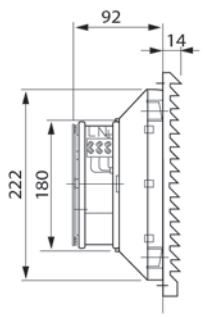

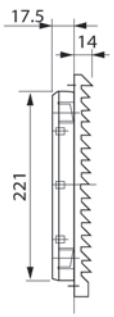



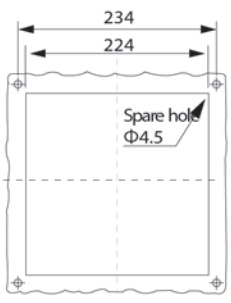

FAN-AND-FILTER LK6625-E series



LK6625-E.230



LK6625.300



IP54 CE RoHS COMPLIANT -30 +70 °C

SPECIFICATION

Fan filter model	LK6625-E.230	LK6625-E.115
Rated voltage	200V-240V AC	100-125V AC
Rated frequency	50/60Hz	50/60Hz
Air flow rate, free blowing	420/430m³/h	420/430m³/h
Air flow rate, Equipped with standard filter mat	1×LK6625.300:295/300m³/h	
Axial flow fan	Capacitor operated	
Rated current	0.35A/0.32A	0.60A/0.58A
Power	45/42W	45/42W
Noise level	60dB(A)	60dB(A)
Operating temperature range	-30°C ~ +70°C	-30°C ~ +70°C
Outlet filter model	LK6625.300	LK6625.300
Material	Thermoplastic, UL94 V-0 (optional)	
Air flow direction	Air-in as standard; air-out optional	



Straight Line Grill Design



Thinner Cover



Premium Sealing Gasket

DIMENSION (mm)

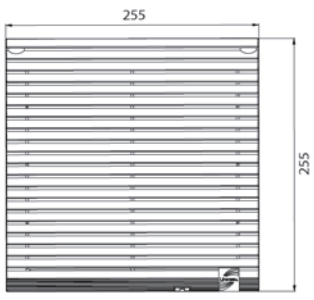



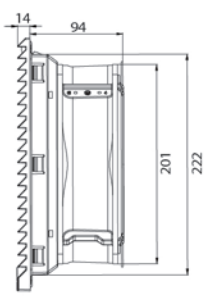

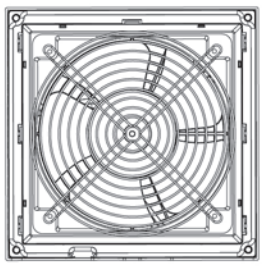

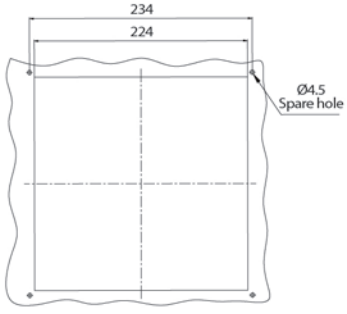

LK6625-F series FAN-AND-FILTER



LK6625-F .230



LK6625 .300



IP54 CE RoHS COMPLIANT -30 +70 °C

SPECIFICATION

Fan filter model	LK6625-F.230	LK6625-F.115
Rated voltage	200V-240V AC	100-125V AC
Rated frequency	50/60Hz	50/60Hz
Air flow rate, free blowing	700/750m³/h	700/750m³/h
Air flow rate, Equipped with standard filter mat	1×LK6625.300:490/525m³/h	
Axial flow fan	Capacitor operated	
Rated current	0.30A/0.35A	0.60A/0.70A
Power	60/80W	60/80W
Noise level	60dB(A)	60dB(A)
Operating temperature range	-30°C ~ +70°C	-30°C ~ +70°C
Outlet filter model	LK6625.300	LK6625.300
Material	Thermoplastic, UL94 V-0 (optional)	
Air flow direction	Air-in as standard; air-out optional	



Straight Line Grill Design



Thinner Cover



Premium Sealing Gasket

DIMENSION (mm)

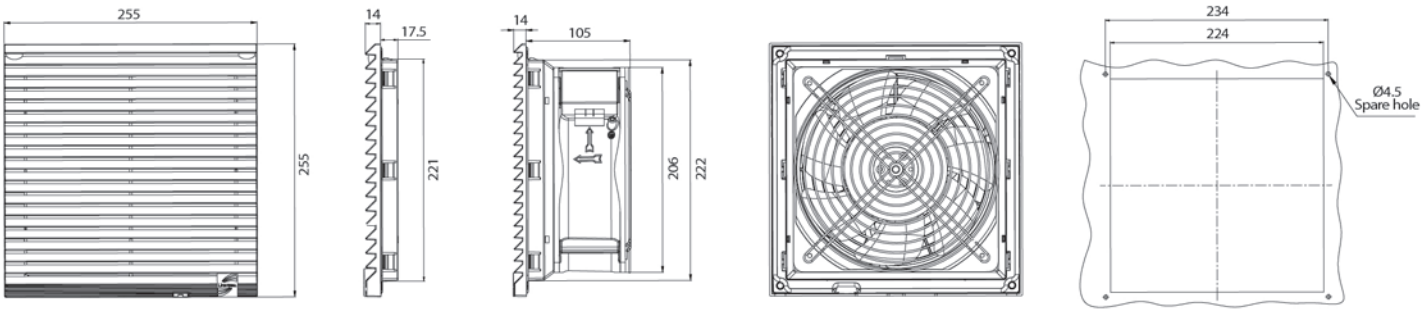

Data page for ref only ,
details & doubts please email: info@linkwell.org

FAN-AND-FILTER LK6626 series



LK6626 .230



LK6626 .300



IP54 CE RoHS COMPLIANT -30 +70 °C

SPECIFICATION

Fan filter model	LK6626.230	LK6626.115
Rated voltage	200V-240V AC	100-125V AC
Rated frequency	50/60Hz	50/60Hz
Air flow rate, free blowing	550/600m³/h	550/600m³/h
Air flow rate, Equipped with standard filter mat	1×LK6626.300:380/410m³/h	
Axial flow fan	Capacitor operated	
Rated current	0.30A/0.35A	0.55A/0.65A
Power	55/65W	55/65W
Noise level	62/65dB(A)	62/65dB(A)
Operating temperature range	-30°C ~ +70°C	-30°C ~ +70°C
Outlet filter model	LK6626.300	LK6626.300
Material	Thermoplastic, UL94 V-0 (optional)	
Air flow direction	Air-in as standard; air-out optional	



Straight Line Grill Design



Thinner Cover



Premium Sealing Gasket

DIMENSION (mm)

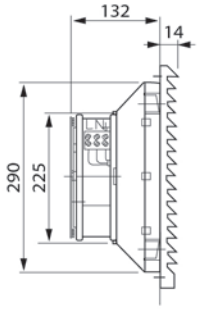

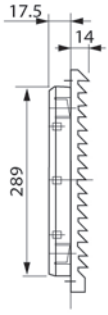



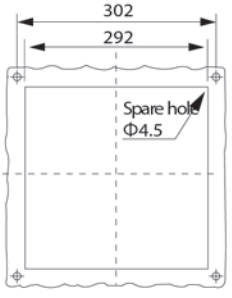

LK6627 series FAN-AND-FILTER



LK6627 .230



LK6626 .300



IP54 CE RoHS COMPLIANT -30 +70 °C

SPECIFICATION

Fan filter model	LK6627.230	LK6627.115
Rated voltage	200V-240V AC	100-125V AC
Rated frequency	50/60Hz	50/60Hz
Air flow rate, free blowing	1150/1350m³/h	1150/1350m³/h
Air flow rate, Equipped with standard filter mat	1×LK6626.300:750/950m³/h	
Axial flow fan	Capacitor operated	
Rated current	0.55/0.65A	1.0/1.1A
Power	110/150W	110/150W
Noise level	68/71dB(A)	68/71dB(A)
Operating temperature range	-30°C ~ +70°C	-30°C ~ +70°C
Outlet filter model	LK6626.300	LK6626.300
Material	Thermoplastic, UL94 V-0 (optional)	
Air flow direction	Air-in as standard; air-out optional	



Straight Line Grill Design



Thinner Cover



Premium Sealing Gasket

DIMENSION (mm)

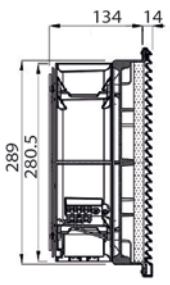

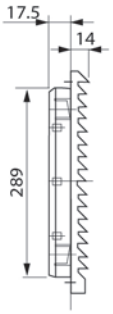



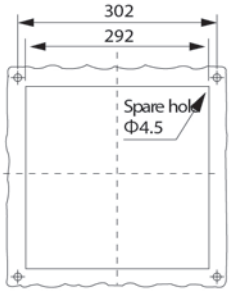

Data page for ref only ,
details & doubts please email: info@linkwell.org



FF109 .230



EF109



IP54 CE RoHS COMPLIANT UL94 V-0 -40 +80 °C

SPECIFICATION

Fan filter model	FF109.230	FF109.115	FF109.024
Rated voltage	200V-240V AC	100-125V AC	24V DC
Rated frequency	50/60Hz	50/60Hz	—
Air flow rate, free blowing	28/38m³/h	28/38m³/h	38m³/h
Air flow rate, Equipped with standard filter mat	1×EF109:22/28m³/h		
Axial flow fan	Self starting shaded pole motor		
Rated current	0.09/0.08A	0.16/0.14A	0.85A
Power	13/12W	13/12W	2.04W
Noise level	28/32dB(A)	28/32dB(A)	36dB(A)
Operating temperature range	-40°C ~ +80°C	-40°C ~ +80°C	-40°C ~ +80°C
Outlet filter model	EF109	EF109	EF109
Material	PC alloy plastic, material meets UL94 V-0		
Air flow direction	Air-in as standard; air-out optional		



Straight Design



Easy Replacement of Filter Pad



Premium Sealing Gasket

DIMENSION (mm)

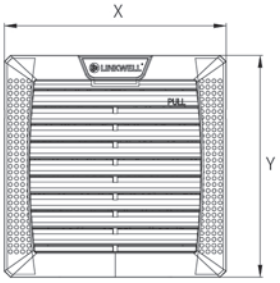



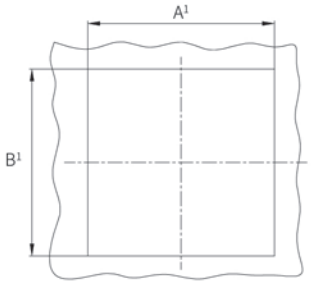

mm		X	Y	Z1	Z2	A¹	B¹
FF109	AC	109	109	4	62	92	92
	DC	109	109	4	62	92	92
EF109		109	109	4	62	92	92

Suitable for cabinet wall thickness not exceeding 2mm. When 2mm < material thickness ≤ 3mm, the opening size should be increased by 1mm



FF145.230



EF145



IP54 CE RoHS UL94 V-0 -40 +80 °C

SPECIFICATION

Fan filter model	FF145.230	FF145.115	FF145.024
Rated voltage	200V-240V AC	100-125V AC	24V DC
Rated frequency	50/60Hz	50/60Hz	—
Air flow rate, free blowing	65/85m³/h	65/85m³/h	100m³/h
Air flow rate, Equipped with standard filter mat	1×EF145:55/70m³/h		
Axial flow fan	Self starting shaded pole motor		
Rated current	0.12A/0.11A	0.24A/0.22A	0.20A
Power	19/18W	19/18W	4.8W
Noise level	41/42dB(A)	41/42dB(A)	41dB(A)
Operating temperature range	-40°C ~ +80°C	-40°C~ +80°C	-40°C ~ +80°C
Outlet filter model	EF145	EF145	EF145
Material	PC alloy plastic, material meets UL94 V-0		
Air flow direction	Air-in as standard;air-out optional		



Straight Design



Easy Replacement of Filter Pad



Premium Sealing Gasket

DIMENSION (mm)

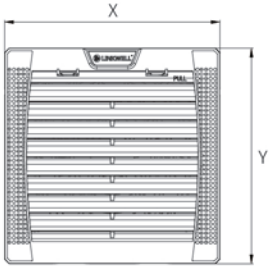

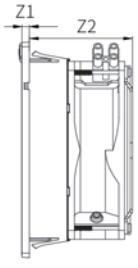

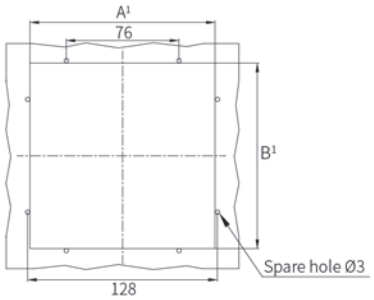

mm		X	Y	Z1	Z2	A¹	B¹
FF145	AC	145	145	5	70	125	125
	DC	145	145	5	70	125	125
EF145		145	145	5	70	125	125

Suitable for cabinet wall thickness not exceeding 2mm. When 2mm < material thickness ≤ 3mm, the opening size should be increased by 1mm

FAN-AND-FILTER FF202 series



FF202 .230



EF202



IP54 CE RoHS COMPLIANT UL94 V-0 -40 +80 °C

SPECIFICATION

Fan filter model	FF202.230	FF202.115	FF202.024
Rated voltage	200V-240V AC	100-125V AC	24V DC
Rated frequency	50/60 Hz	50/60 Hz	—
Air flow rate, free blowing	105/126m³/h	105/126m³/h	126m³/h
Air flow rate, Equipped with standard filter mat	1×EF202:78/90m³/h		
Axial flow fan	Self starting shaded pole motor		
Rated current	0.12A/0.11A	0.24A/0.22A	0.20A
Power	19/18W	19/18W	4.8W
Noise level	41/42dB(A)	41/42dB(A)	41dB(A)
Operating temperature range	-40°C ~ +80°C	-40°C~ +80°C	-40°C ~ +80°C
Outlet filter model	EF202	EF202	EF202
Material	PC alloy plastic, material meets UL94 V-0		
Air flow direction	Air-in as standard; air-out optional		



Straight Design



Easy Replacement of Filter Pad



Premium Sealing Gasket

DIMENSION (mm)

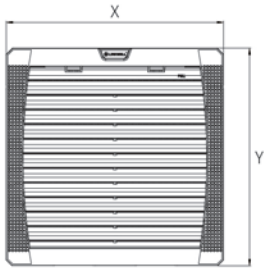

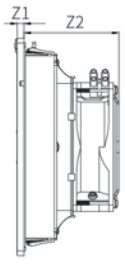

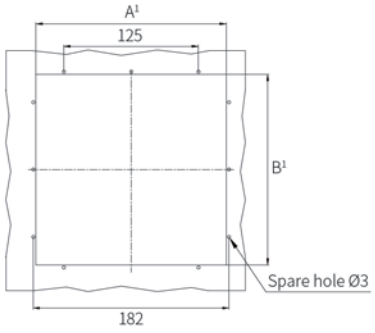

mm		X	Y	Z1	Z2	A¹	B¹
FF202	AC	202	202	6.5	87	177	177
	DC	202	202	6.5	87	177	177
EF202		202	202	6.5	87	177	177

Suitable for cabinet wall thickness not exceeding 2mm. When 2mm < material thickness ≤ 3mm, the opening size should be increased by 1mm

FF252-P series FAN-AND-FILTER



FF252-P .230



EF252



IP54 CE RoHS COMPLIANT UL94 V-0 -40 +80 °C

SPECIFICATION

Fan filter model	FF252-P.230	FF252-P.115	FF252-P.024
Rated voltage	200V-240V AC	100-125V AC	24V DC
Rated frequency	50/60Hz	50/60Hz	—
Air flow rate, free blowing	220/240m³/h	220/240m³/h	300m³/h
Air flow rate, Equipped with standard filter mat	1×EF252:155/185m³/h		
Axial flow fan	Self starting shaded pole motor		
Rated current	0.24A/0.22A	0.45A/0.42A	0.50A
Power	38/36W	38/36W	12W
Noise level	50/52dB(A)	50/52dB(A)	50dB(A)
Operating temperature range	-40°C ~ +80°C	-40°C ~ +80°C	-40°C ~ +80°C
Outlet filter model	EF252	EF252	EF252
Material	PC alloy plastic, material meets UL94 V-0		
Air flow direction	Air-in as standard; air-out optional		



Straight Design



Easy Replacement of Filter Pad



Premium Sealing Gasket

DIMENSION (mm)

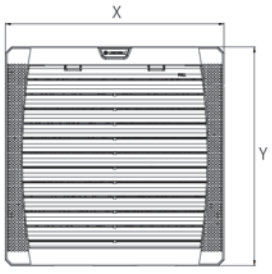

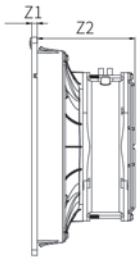

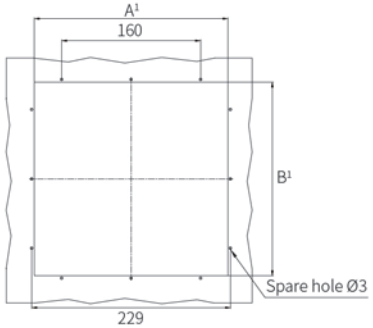

mm		X	Y	Z1	Z2	A¹	B¹
FF252-P	AC	252	252	6.5	111	223	223
	DC	252	252	6.5	111	223	223
EF252		252	252	6.5	33	223	223

Suitable for cabinet wall thickness not exceeding 2mm. When 2mm < material thickness ≤ 3mm, the opening size should be increased by 1mm

FAN-AND-FILTER FF252-M series



FF252-M .230



EF252



IP54 CE RoHS COMPLIANT UL94 V-0 -40 +80 °C

SPECIFICATION

Fan filter model	FF252-M.230	FF252-M.115
Rated voltage	200V-240V AC	100-125V AC
Rated frequency	50/60Hz	50/60Hz
Air flow rate, free blowing	230/265m³/h	230/265m³/h
Air flow rate, Equipped with standard filter mat	1×EF252:190/215m³/h	
Axial flow fan	Capacitor operated	
Rated current	0.22A/0.20A	0.45A/0.50A
Power	37/35W	37/35W
Noise level	50/52dB(A)	50/52dB(A)
Operating temperature range	-40°C ~ +80°C	-40°C ~ +80°C
Outlet filter model	EF252	EF252
Material	PC alloy plastic, material meets UL94 V-0	
Air flow direction	Air-in as standard; air-out optional	



Straight Design



Easy Replacement of Filter Pad



Premium Sealing Gasket

DIMENSION (mm)

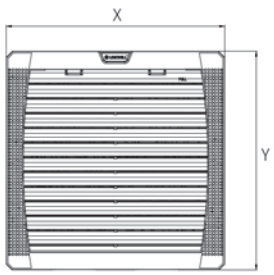

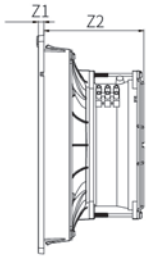

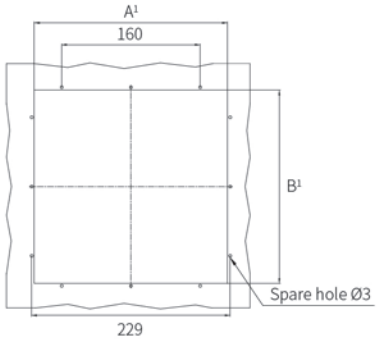

mm	X	Y	Z1	Z2	A¹	B¹
FF252-M	252	252	6.5	114	223	223
EF252	252	252	6.5	33	223	223

Suitable for cabinet wall thickness not exceeding 2mm. When 2mm < material thickness ≤ 3mm, the opening size should be increased by 1mm



FF320 .230



EF320



IP54 CE RoHS COMPLIANT UL94 V-0 -40 +80 °C

SPECIFICATION

Fan filter model	FF320.230	FF320.115
Rated voltage	200V-240V AC	100-125V AC
Rated frequency	50/60Hz	50/60Hz
Air flow rate, free blowing	550/600m³/h	550/600m³/h
Air flow rate, Equipped with standard filter mat	1×EF320:380/410m³/h	
Axial flow fan	Capacitor operated	
Rated current	0.30A/0.55A	0.55A/0.65A
Power	55/65W	55/65W
Noise level	62/65dB(A)	62/65dB(A)
Operating temperature range	-40°C ~ +80°C	-40°C ~ +80°C
Outlet filter model	EF320	EF320
Material	PC alloy plastic, material meets UL94 V-0	
Air flow direction	Air-out as standard; air-in optional	



Straight Design



Easy Replacement of Filter Pad



Premium Sealing Gasket

DIMENSION (mm)

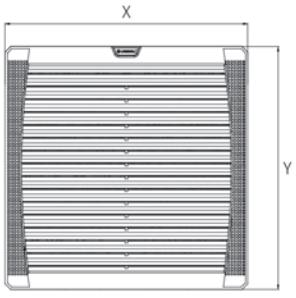

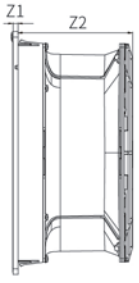

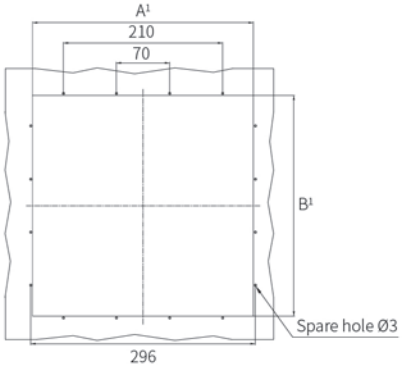

mm	X	Y	Z1	Z2	A¹	B¹
FF320	320	320	7	162	291	291
EF320	320	320	7	36	291	291

Suitable for cabinet wall thickness not exceeding 2mm. When 2mm < material thickness ≤ 3mm, the opening size should be increased by 1mm



FF320-D .230



EF320



IP54 CE RoHS COMPLIANT UL94 V-0 -40 +80 °C

SPECIFICATION

Fan filter model	FF320-D.230	FF320-D.115
Rated voltage	200V-240V AC	100-125V AC
Rated frequency	50/60Hz	50/60Hz
Air flow rate, free blowing	1150/1350m³/h	1150/1350m³/h
Air flow rate, Equipped with standard filter mat	1×EF320:750/950m³/h	
Axial flow fan	Capacitor operated	
Rated current	0.55A/0.65A	1.0A/1.1A
Power	110/150W	110/150W
Noise level	68/71dB(A)	68/71dB(A)
Operating temperature range	-40°C ~ +80°C	-40°C ~ +80°C
Outlet filter model	EF320	EF320
Material	PC alloy plastic, material meets UL94 V-0	
Air flow direction	Air-out as standard; air-in optional	



Straight Design



Easy Replacement of Filter Pad



Premium Sealing Gasket

DIMENSION (mm)

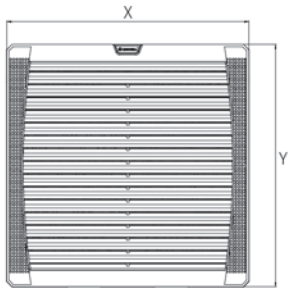

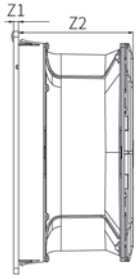

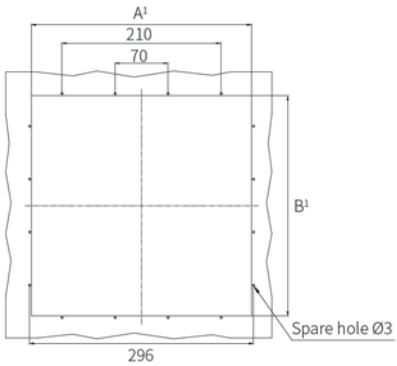

mm	X	Y	Z1	Z2	A¹	B¹
FF320-D	320	320	7	162	291	291
EF320	320	320	7	36	291	291

Suitable for cabinet wall thickness not exceeding 2mm. When 2mm < material thickness ≤ 3mm, the opening size should be increased by 1mm



FF5000 .230



EF320



IP54 CE RoHS COMPLIANT UL94 V-0 -40 +80 °C

SPECIFICATION

Fan filter model	FF5000.230	FF5000.115
Rated voltage	200V-240V AC	100-125V AC
Rated frequency	50/60Hz	50/60Hz
Air flow rate, free blowing	550/600m³/h	550/600m³/h
Air flow rate, Equipped with standard filter mat	1×EF320:380/410m³/h	
Axial flow fan	Capacitor operated	
Rated current	0.30A/0.35A	0.55A/0.65A
Power	55/65W	55/65W
Noise level	62/65dB(A)	62/65dB(A)
Operating temperature range	-40°C ~ +80°C	-40°C ~ +80°C
Outlet filter model	EF320	EF320
Material	PC alloy plastic, material meets UL94 V-0	
Air flow direction	Air-in as standard; air-out optional	



Straight Design



Easy Replacement of Filter Pad



Premium Sealing Gasket

DIMENSION (mm)

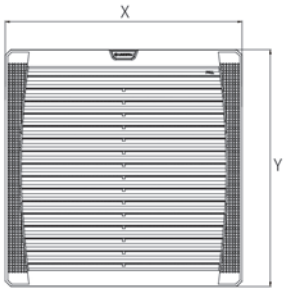

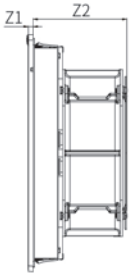

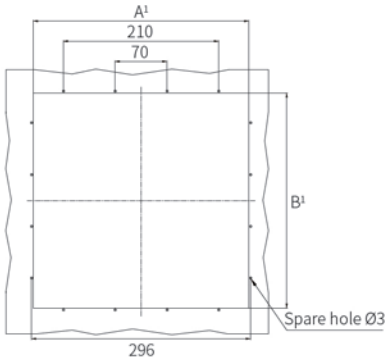

mm	X	Y	Z1	Z2	A¹	B¹
FF5000	320	320	7	125	291	291
EF320	320	320	7	36	291	291

Suitable for cabinet wall thickness not exceeding 2mm. When 2mm < material thickness ≤ 3mm, the opening size should be increased by 1mm

FAN-AND-FILTER FF7000 series



FF7000 .230



EF320



IP54 CE RoHS COMPLIANT UL94 V-0 -40 +80 °C

SPECIFICATION

Fan filter model	FF7000.230	FF7000.115
Rated voltage	200V-240V AC	100-125V AC
Rated frequency	50/60Hz	50/60Hz
Air flow rate, free blowing	1150/1350m³/h	1150/1350m³/h
Air flow rate, Equipped with standard filter mat	1×EF320:750/950m³/h	
Axial flow fan	Capacitor operated	
Rated current	0.55A/0.65A	1.0A/1.1A
Power	110/150W	110/150W
Noise level	68/71dB(A)	68/71dB(A)
Operating temperature range	-40°C ~ +80°C	-40°C ~ +80°C
Outlet filter model	EF320	EF320
Material	PC alloy plastic, material meets UL94 V-0	
Air flow direction	Air-in as standard; air-out optional	



Straight Design



Easy Replacement of Filter Pad



Premium Sealing Gasket

DIMENSION (mm)

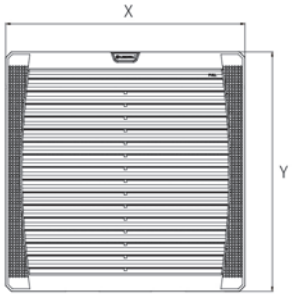

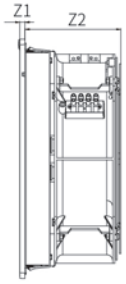

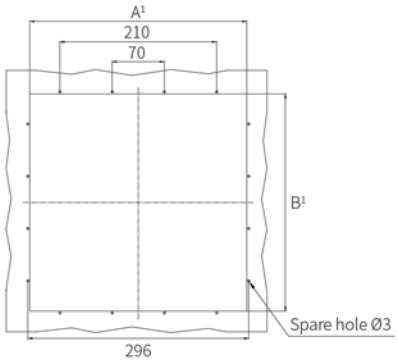

mm	X	Y	Z1	Z2	A¹	B¹
FF7000	320	320	7	127	291	291
EF320	320	320	7	36	291	291

Suitable for cabinet wall thickness not exceeding 2mm. When 2mm < material thickness ≤ 3mm, the opening size should be increased by 1mm



FF130.230



EF130



IP54 CE RoHS COMPLIANT UL94 V-0 -40 +80 °C

SPECIFICATION

Fan filter model	FF130.230	FF130.115	FF130.024
Rated voltage	200V-240V AC	100-125V AC	24V DC
Rated frequency	50/60Hz	50/60Hz	—
Air flow rate, free blowing	80/110m³/h	80/110m³/h	110m³/h
Air flow rate, Equipped with standard filter mat	1×EF130:60/72m³/h		
Axial flow fan	Self starting shaded pole motor		
Rated current	0.27A/0.24A	0.48A/0.42A	0.26A
Power	39/36W	39/36W	6.12W
Noise level	35/38dB(A)	35/38dB(A)	38dB(A)
Operating temperature range	-40°C ~ +80°C	-40°C ~ +80°C	-40°C ~ +80°C
Outlet filter model	EF130	EF130	EF130
Material	PC alloy plastic, material meets UL94 V-0		
Air flow direction	Air-in as standard; air-out optional		



Straight Design



Easy Replacement of Filter Pad



Premium Sealing Gasket

DIMENSION (mm)

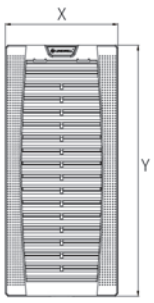



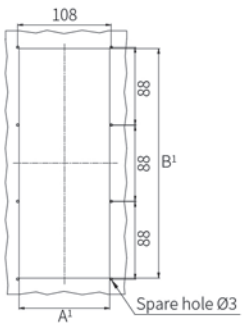

mm		X	Y	Z1	Z2	A¹	B¹
FF130	AC	130	290	5	74	105	265
	DC	130	290	5	74	105	265
EF130		130	290	5	74	105	265

Suitable for cabinet wall thickness not exceeding 2mm. When 2mm < material thickness ≤ 3mm, the opening size should be increased by 1mm

FIL TER FAM EF363



IP54 CE RoHS COMPLIANT UL94 V-0 -40 +80 °C

SPECIFICATION

Model	EF363
Dimension	363*483*42mm
Operating temperature	-20°C ~ +60°C
Combination weight	~
Single weight	1.1kg
Dust removal rate	87%
Colour	RAL7035
Available fan	~
Grade of filter cotton	G4
IP code	IP54
Certificate	CE. EMC. ROHS

DIMENSION (mm)

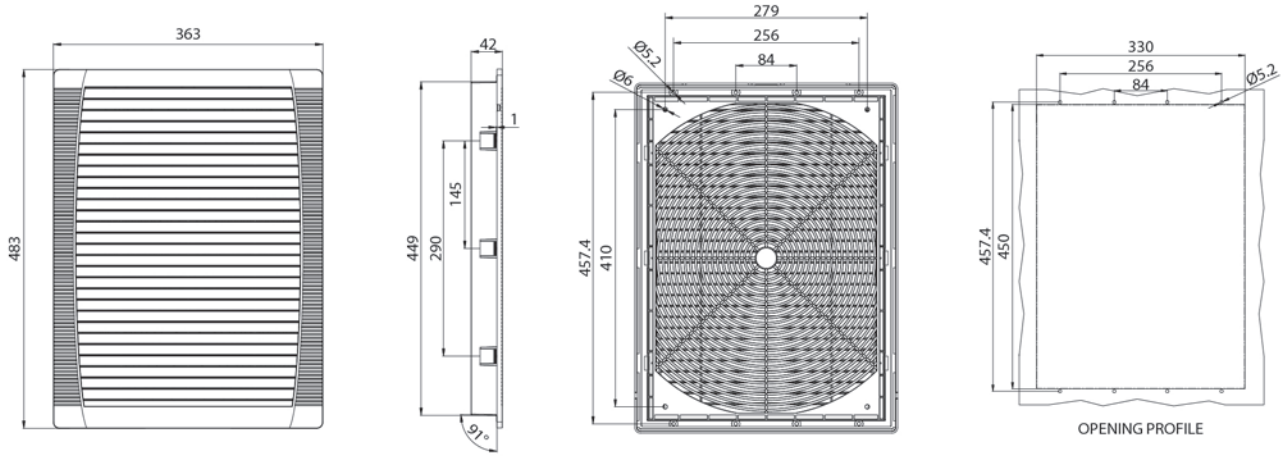



FK5521 .230



FK5521 .300



IP54 CE RoHS COMPLIANT -30 +70 °C

SPECIFICATION

Fan filter model	FK5521.230	FK5521.115	FK5521.024
Rated voltage	200V-240V AC	100-125V AC	24V DC
Rated frequency	50/60Hz	50/60Hz	—
Air flow rate, free blowing	25/35m³/h	25/35m³/h	35m³/h
Air flow rate, Equipped with standard filter mat	1×FK5521.300:22/28m³/h		
Axial flow fan	Self starting shaded pole motor		
Rated current	0.09A/0.08A	0.16A/0.14A	0.085A
Power	13/12W	13/12W	2.04W
Noise level	28/32dB(A)	28/32dB(A)	36dB(A)
Operating temperature range	-30°C ~ +70°C	-30°C ~ +70°C	-30°C ~ +70°C
Outlet filter model	FK5521.300	FK5521.300	FK5521.300
Material	Thermoplastic, UL94 V-0 (optional)		
Air flow direction	Air-in as standard; air-out optional		



Curve Line Grill Design



Premium Sealing Gasket



High Quality Filter Cotton

DIMENSION (mm)

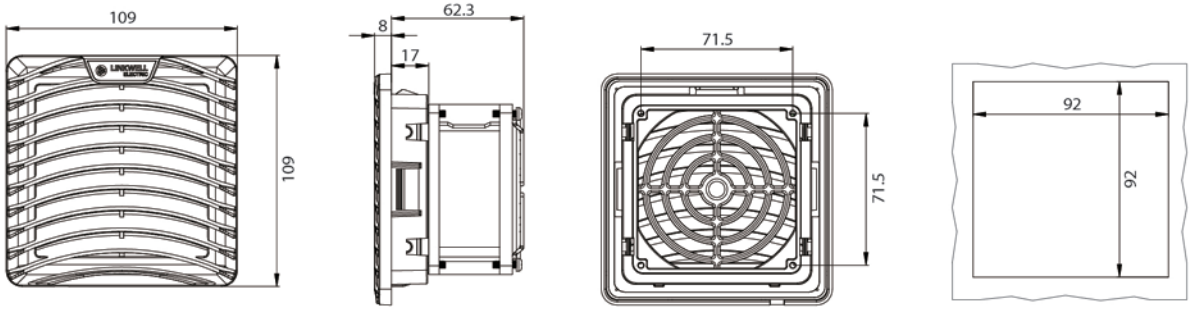

Data page for ref only ,
details & doubts please email: info@linkwell.org

FAN-AND-FILTER FK5522 series



FK5522 .230



FK5522 .300



IP54 CE RoHS COMPLIANT -30 +70 °C

SPECIFICATION

Fan filter model	FK5522.230	FK5522.115	FK5522.024
Rated voltage	200V-240V AC	100-125V AC	24V DC
Rated frequency	50/60Hz	50/60Hz	—
Air flow rate, free blowing	65/85m³/h	65/85m³/h	100m³/h
Air flow rate, Equipped with standard filter mat	1×FK5522.300:55/70m³/h		
Axial flow fan	Self starting shaded pole motor		
Rated current	0.12A/0.11A	0.24A/0.22A	0.20A
Power	19/18W	19/18W	4.8W
Noise level	41/42dB(A)	41/42dB(A)	41dB(A)
Operating temperature range	-30°C ~ +70°C	-30°C ~ +70°C	-30°C ~ +70°C
Outlet filter model	FK5522.300	FK5522.300	FK5522.300
Material	Thermoplastic, UL94 V-0 (optional)		
Air flow direction	Air-in as standard; air-out optional		



Curve Line Grill Design



Premium Sealing Gasket



High Quality Filter Cotton

DIMENSION (mm)

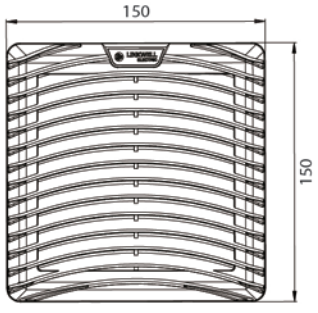

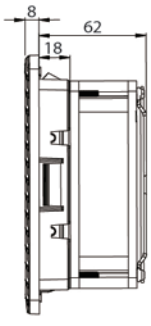

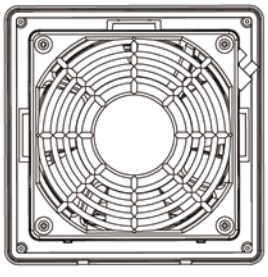

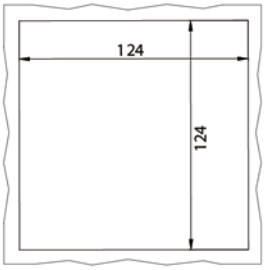



FK5523 .230



FK5523 .300



IP54 CE RoHS COMPLIANT -30 +70 °C

SPECIFICATION

Fan filter model	FK5523.230	FK5523.115	FK5523.024
Rated voltage	200V-240V AC	100-125V AC	24V DC
Rated frequency	50/60Hz	50/60Hz	—
Air flow rate, free blowing	105/126m³/h	105/126m³/h	126m³/h
Air flow rate, Equipped with standard filter mat	1×FK5523.300:78/90m³/h		
Axial flow fan	Self starting shaded pole motor		
Rated current	0.12A/0.11A	0.24A/0.22A	0.20A
Power	19/18W	19/18W	4.8W
Noise level	41/42dB(A)	41/42dB(A)	41dB(A)
Operating temperature range	-30°C ~ +70°C	-30°C ~ +70°C	-30°C ~ +70°C
Outlet filter model	FK5522.300	FK5522.300	FK5522.300
Material	Thermoplastic, UL94 V-0 (optional)		
Air flow direction	Air-in as standard; air-out optional		



Curve Line Grill Design



Premium Sealing Gasket



High Quality Filter Cotton

DIMENSION (mm)

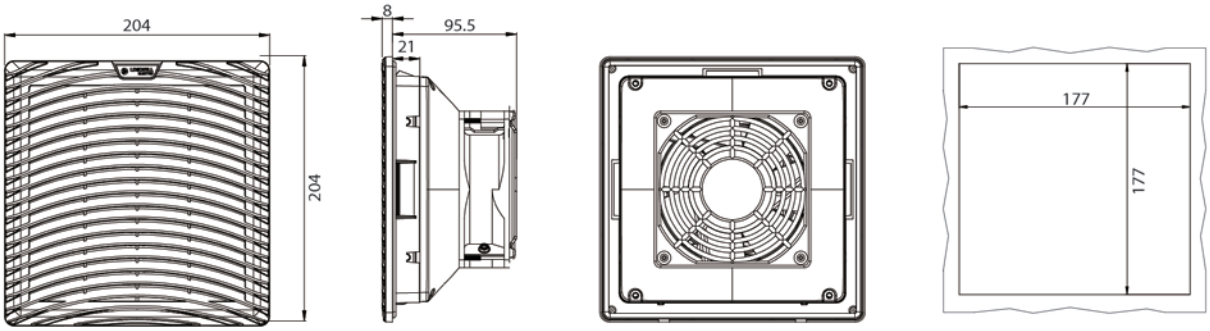

FAN-AND-FILTER FK5524 series



FK5524 .230



FK5524 .300



IP54 CE RoHS COMPLIANT -30 +70 °C

SPECIFICATION

Fan filter model	FK5524.230	FK5524.115	FK5524.024
Rated voltage	200V-240V AC	100V-125V AC	24V DC
Rated frequency	50/60Hz	50/60Hz	—
Air flow rate, free blowing	220/240m³/h	220/240m³/h	300m³/h
Air flow rate, Equipped with standard filter mat	1×FK5524.300:155/185m³/h		
Axial flow fan	Self starting shaded pole motor		
Rated current	0.24A/0.22A	0.45A/0.42A	0.50A
Power	38/36W	38/36W	12W
Noise level	50/52dB(A)	50/52dB(A)	50dB(A)
Operating temperature range	-30°C ~ +70°C	-30°C ~ +70°C	-30°C ~ +70°C
Outlet filter model	FK5524.300	FK5524.300	FK5524.300
Material	Thermoplastic, UL94 V-0 (optional)		
Air flow direction	Air-in as standard; air-out optional		



Curve Line Grill Design



Premium Sealing Gasket



High Quality Filter Cotton

DIMENSION (mm)

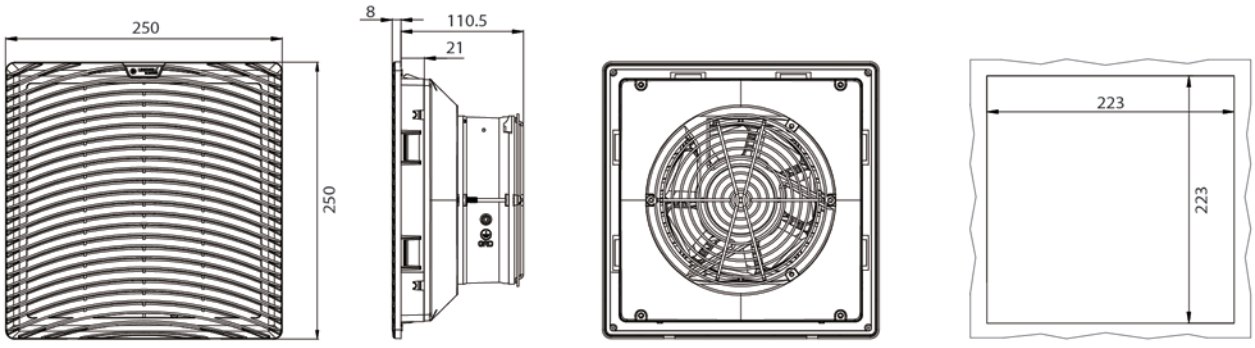

FK5524-S series FAN-AND-FILTER



FK5524-S .230



FK5525 .300



IP54 CE RoHS COMPLIANT -30 +70 °C

SPECIFICATION

Fan filter model	FK5524-S.230	FK5524-S.115	FK5524-S.024
Rated voltage	200V-240V AC	100-125V AC	24V DC
Rated frequency	50/60Hz	50/60Hz	–
Air flow rate, free blowing	105/126m³/h	105/126m³/h	126m³/h
Air flow rate, Equipped with standard filter mat	1×FK5525.300:78/90m³/h		
Axial flow fan	Self starting shaded pole motor		
Rated current	0.12A/0.11A	0.24A/0.22A	0.20A
Power	19/18W	19/18W	4.8W
Noise level	41/42dB(A)	41/42dB(A)	41dB(A)
Operating temperature range	-30°C ~ +70°C	-30°C~ +70°C	-30°C ~ +70°C
Outlet filter model	FK5525.300	FK5525.300	FK5525.300
Material	Thermoplastic, UL94 V-0 (optional)		
Air flow direction	Air-in as standard; air-out optional		



Curve Line Grill Design



Premium Sealing Gasket



High Quality Filter Cotton

DIMENSION (mm)

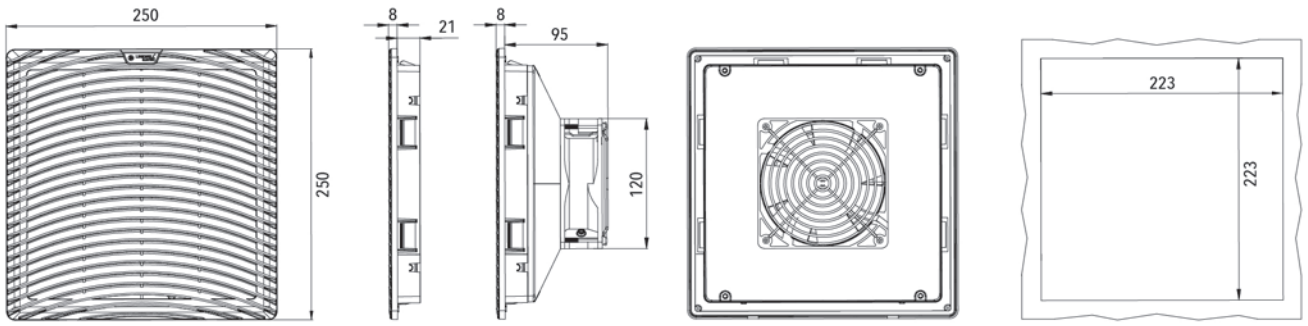



FK5525.230



FK5525.300



IP54 CE RoHS COMPLIANT -30 +70

SPECIFICATION

Fan filter model	FK5525.230	FK5525.115
Rated voltage	200V-240V AC	100V-125V AC
Rated frequency	50/60Hz	50/60Hz
Air flow rate, free blowing	230/265m³/h	230/265m³/h
Air flow rate, Equipped with standard filter mat	1×FK5525.300:190/215m³/h	
Axial flow fan	Capacitor operated	
Rated current	0.22A/0.20A	0.45A/0.50A
Power	37/35W	37/35W
Noise level	50/52dB(A)	50/52dB(A)
Operating temperature range	-30°C ~ +70°C	-30°C ~ +70°C
Outlet filter model	FK5525.300	FK5525.300
Material	Thermoplastic, UL94 V-0 (optional)	
Air flow direction	Air-in as standard; air-out optional	



Curve Line Grill Design



Premium Sealing Gasket



High Quality Filter Cotton

DIMENSION (mm)

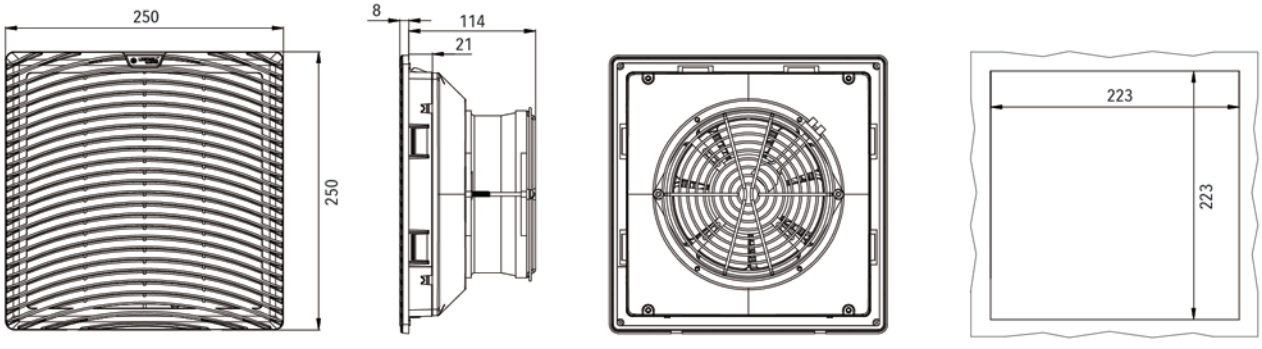



FK5525-D.230



FK5525.300



IP54 CE RoHS COMPLIANT -30 +70 °C

SPECIFICATION

Fan filter model	FK5525-D.230	FK5525-D.115
Rated voltage	200V-240V AC	100V-125V AC
Rated frequency	50/60Hz	50/60Hz
Air flow rate, free blowing	330/370m³/h	330/370m³/h
Air flow rate, Equipped with standard filter mat	1×FK5525.300:231/259m³/h	
Axial flow fan	Capacitor operated	
Rated current	0.22A/0.20A	0.45A/0.50A
Power	37/35W	37/35W
Noise level	50/52dB(A)	50/52dB(A)
Operating temperature range	-30°C ~ +70°C	-30°C ~ +70°C
Outlet filter model	FK5525.300	FK5525.300
Material	Thermoplastic, UL94 V-0 (optional)	
Air flow direction	Air-in as standard; air-out optional	



Curve Line Grill Design



Premium Sealing Gasket



High Quality Filter Cotton

DIMENSION (mm)

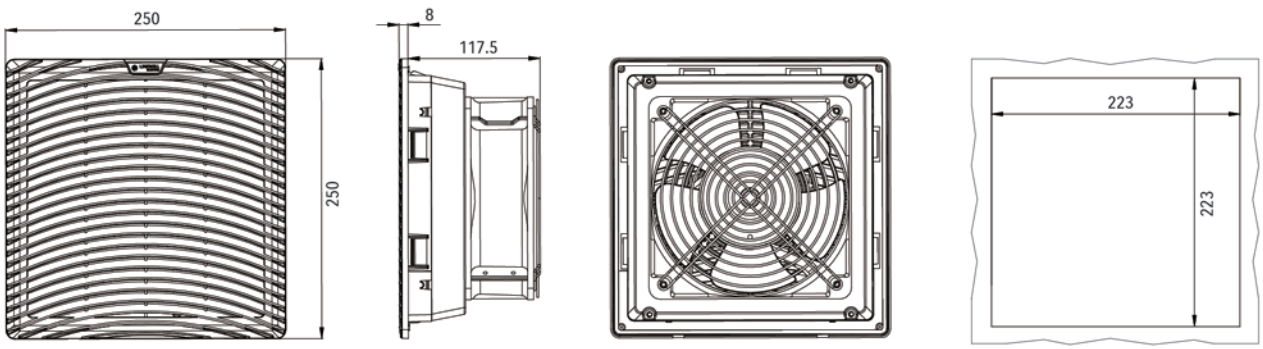

Data page for ref only ,
details & doubts please email: info@linkwell.org

FAN-AND-FILTER FK5525-E series



FK5525-E.230



FK5525.300



IP54 CE RoHS COMPLIANT -30 +70 °C

SPECIFICATION

Fan filter model	FK5525-E.230	FK5525-E.115
Rated voltage	200V-240V AC	100V-125V AC
Rated frequency	50/60Hz	50/60Hz
Air flow rate, free blowing	420/430m³/h	420/430m³/h
Air flow rate, Equipped with standard filter mat	1×FK5525.300:294/301m³/h	
Axial flow fan	Capacitor operated	
Rated current	0.22A/0.20A	0.45A/0.50A
Power	37/35W	37/35W
Noise level	50/52dB(A)	50/52dB(A)
Operating temperature range	-30°C ~ +70°C	-30°C ~ +70°C
Outlet filter model	FK5525.300	FK5525.300
Material	Thermoplastic, UL94 V-0 (optional)	
Air flow direction	Air-in as standard; air-out optional	



Curve Line Grill Design



Premium Sealing Gasket



High Quality Filter Cotton

DIMENSION (mm)

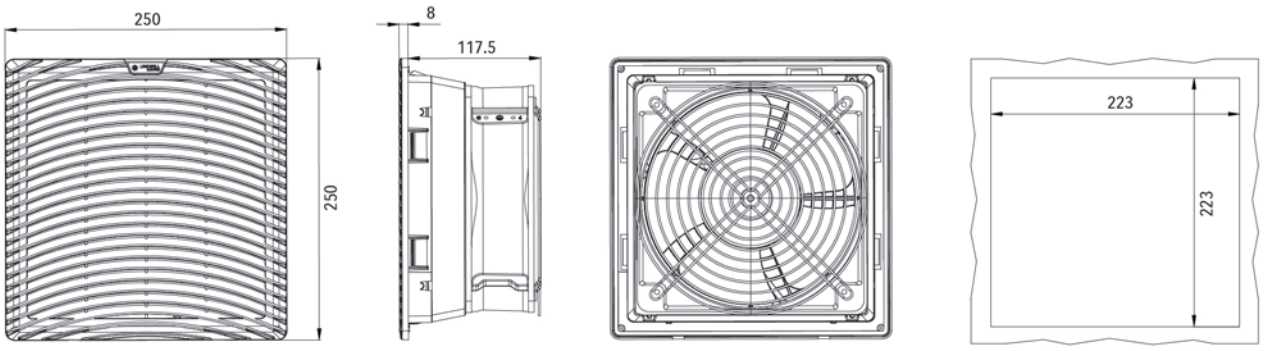



FK5525-F.230



FK5525.300



IP54 CE RoHS COMPLIANT -30 +70 °C

SPECIFICATION

Fan filter model	FK5525-F.230	FK5525-F.115
Rated voltage	200V-240V AC	100V-125V AC
Rated frequency	50/60Hz	50/60Hz
Air flow rate, free blowing	700/750m³/h	700/750m³/h
Air flow rate, Equipped with standard filter mat	1×FK5525.300:490/525m³/h	
Axial flow fan	Capacitor operated	
Rated current	0.22A/0.20A	0.45A/0.50A
Power	37/35W	37/35W
Noise level	50/52dB(A)	50/52dB(A)
Operating temperature range	-30°C ~ +70°C	-30°C ~ +70°C
Outlet filter model	FK5525.300	FK5525.300
Material	Thermoplastic, UL94 V-0 (optional)	
Air flow direction	Air-in as standard; air-out optional	



Curve Line Grill Design



Premium Sealing Gasket



High Quality Filter Cotton

DIMENSION (mm)

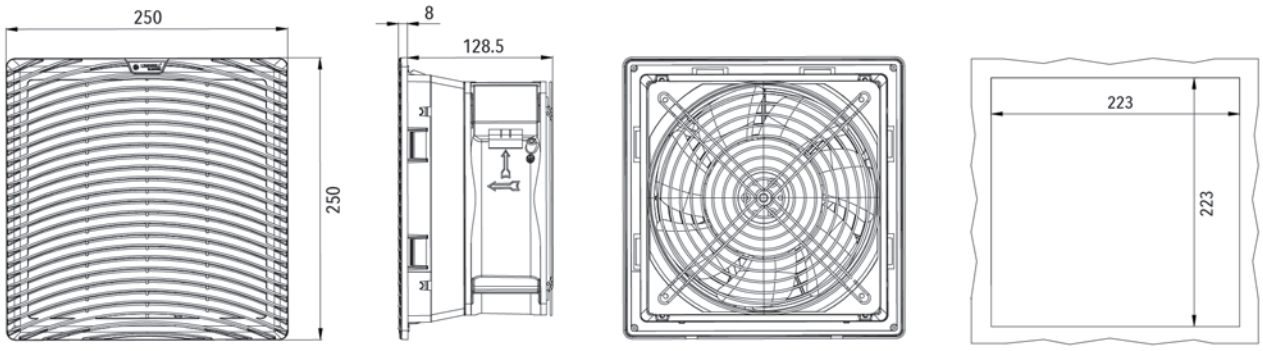

Data page for ref only ,
details & doubts please email: info@linkwell.org

FAN-AND-FILTER FK5526 series



FK5526.230



FK5526.300



IP54 CE RoHS COMPLIANT -30 +70 °C

SPECIFICATION

Fan filter model	FK5526.230	FK5526.115
Rated voltage	200V-240V AC	100V-125V AC
Rated frequency	50/60Hz	50/60Hz
Air flow rate, free blowing	550/600m³/h	550/600m³/h
Air flow rate, Equipped with standard filter mat	1×FK5526.300:380/410m³/h	
Axial flow fan	Capacitor operated	
Rated current	0.30A/0.35A	0.55A/0.65A
Power	55/65W	55/65W
Noise level	62/65dB(A)	62/65dB(A)
Operating temperature range	-30°C ~ +70°C	-30°C ~ +70°C
Outlet filter model	FK5526.300	FK5526.300
Material	Thermoplastic, UL94 V-0 (optional)	
Air flow direction	Air-in as standard; air-out optional	



Curve Line Grill Design



Premium Sealing Gasket



High Quality Filter Cotton

DIMENSION (mm)

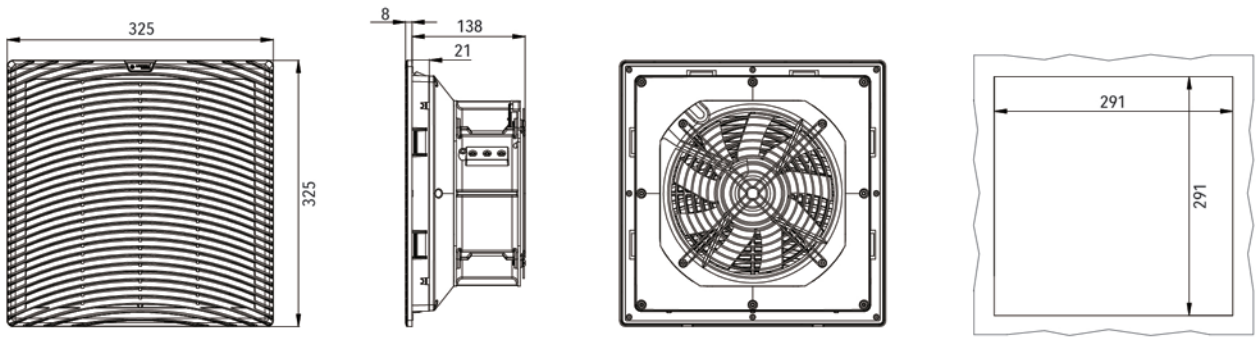



FK5527.230



FK5526.300



IP54 CE RoHS COMPLIANT -30 +70 °C

SPECIFICATION

Fan filter model	FK5527.230	FK5527.115
Rated voltage	200V-240V AC	100V-125V AC
Rated frequency	50/60Hz	50/60Hz
Air flow rate, free blowing	380/400m³/h	
Air flow rate, Equipped with standard filter mat	1×FK5526.300:248/260m³/h	
Axial flow fan	Capacitor operated	
Rated current	0.35A/0.32A	0.58A/0.54A
Power	45/42W	45/42W
Noise level	63/65dB(A)	63/65dB(A)
Operating temperature range	-30°C ~ +70°C	-30°C ~ +70°C
Outlet filter model	FK5526.300	FK5526.300
Material	Thermoplastic, UL94 V-0 (optional)	
Air flow direction	Air-in as standard; air-out optional	



Curve Line Grill Design



Premium Sealing Gasket



High Quality Filter Cotton

DIMENSION (mm)

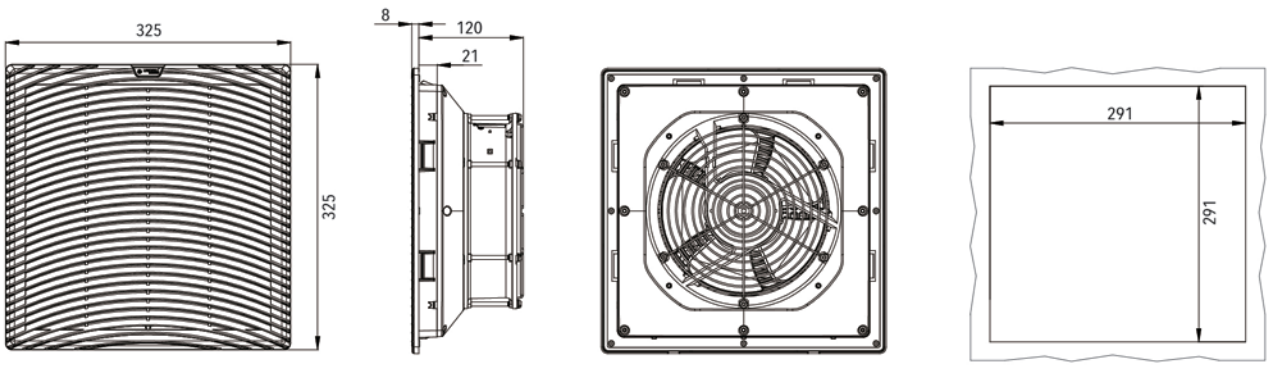

FAN-AND-FILTER FK5528 series



FK5528.230



FK5526.300



IP54 CE RoHS COMPLIANT -30 +70 °C

SPECIFICATION

Fan filter model	FK5528.230	FK5528.115
Rated voltage	200V-240V AC	100V-125V AC
Rated frequency	50/60Hz	50/60Hz
Air flow rate, free blowing	1150/1350m³/h	
Air flow rate, Equipped with standard filter mat	1×FK5526.300:750/950m³/h	
Axial flow fan	Capacitor operated	
Rated current	0.55A/0.65A	1.0A/1.1A
Power	110/150W	110/150W
Noise level	68/71dB(A)	68/71dB(A)
Operating temperature range	-30°C ~ +70°C	-30°C ~ +70°C
Outlet filter model	FK5526.300	FK5526.300
Material	Thermoplastic, UL94 V-0 (optional)	
Air flow direction	Air-in as standard; air-out optional	



Curve Line Grill Design



Premium Sealing Gasket



High Quality Filter Cotton

DIMENSION (mm)

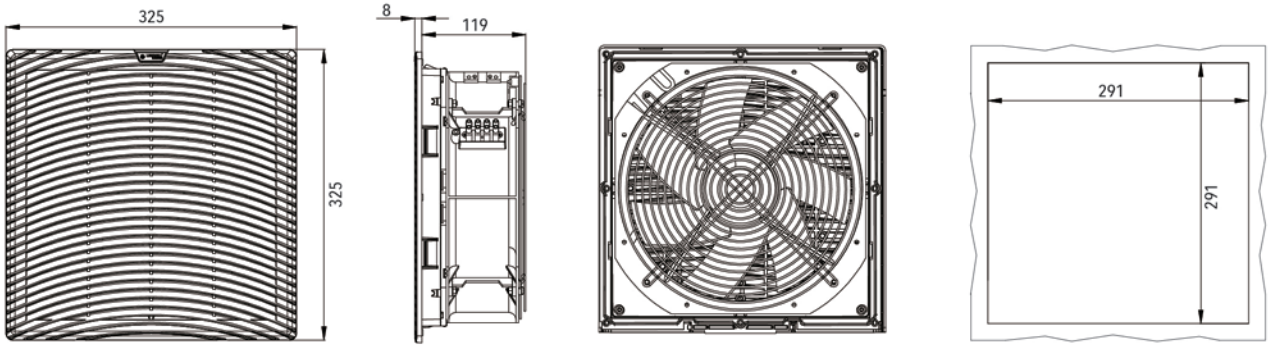



FK5529.230



FK5526.300



IP54 CE RoHS COMPLIANT -30 +70 °C

SPECIFICATION

Fan filter model	FK5529.230	FK5529.115
Rated voltage	200V-240V AC	100V-125V AC
Rated frequency	50/60Hz	50/60Hz
Air flow rate, free blowing	1150/1350m³/h	
Air flow rate, Equipped with standard filter mat	1×FK5526.300:750/950m³/h	
Axial flow fan	Capacitor operated	
Rated current	0.55A/0.65A	1.0A/1.1A
Power	110/150W	110/150W
Noise level	68/71dB(A)	68/71dB(A)
Operating temperature range	-30°C ~ +70°C	-30°C ~ +70°C
Outlet filter model	FK5526.300	FK5526.300
Material	Thermoplastic, UL94 V-0 (optional)	
Air flow direction	Air-in as standard; air-out optional	



Curve Line Grill Design



Premium Sealing Gasket



High Quality Filter Cotton

DIMENSION (mm)

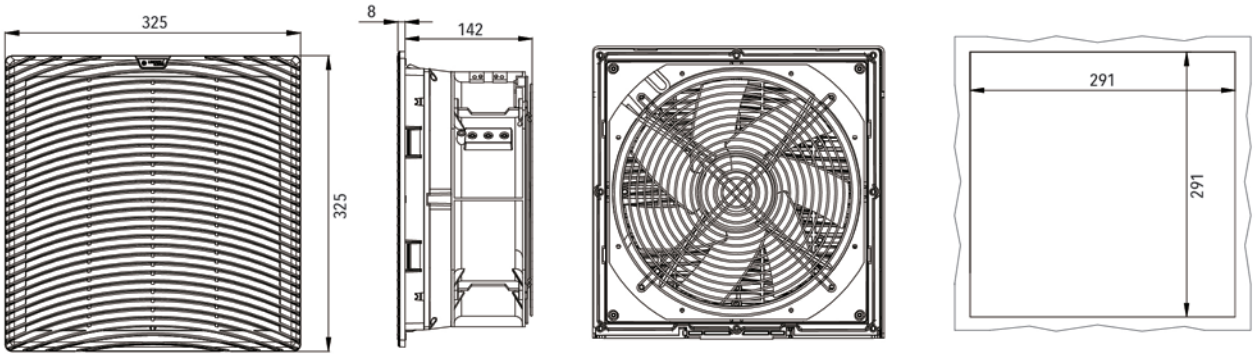

Data page for ref only ,
details & doubts please email: info@linkwell.org



FU95-9225.230



FU95.300



IP54 CE RoHS COMPLIANT -20 +70 °C

SPECIFICATION

Fan filter model	FU95-9225.230	FU95-9225.115	FU95-9225.024
Rated voltage	200V-240V AC	100V-125V AC	24V DC
Rated frequency	50/60Hz	50/60Hz	–
Air flow rate, free blowing	28/38m³/h	28/38m³/h	38m³/h
Air flow rate, Equipped with standard filter mat	1×FU95.300: 20/25m³/h		
Axial flow fan	Self starting shaded pole motor		
Rated current	0.07A/0.06A	0.12A/0.11A	0.08A
Power	12/11W	12/11W	1.92W
Noise level	37/41dB(A)	47/41dB(A)	41dB(A)
Operating temperature range	-30°C ~ +70°C	-30°C ~ +70°C	-30°C ~ +70°C
Outlet filter model	FU95.300	FU95.300	FU95.300
Material	Thermoplastic, UL94 V-0 (optional)		
Air flow direction	Air-in as standard; air-out optional		



Enhanced Grill with Higher IP Rating



Easy-open Structure,quicker Maintenance Of Filter Mat



Snap-in Assembly Or Bolts Fasten

DIMENSION (mm) Optional Fan Size:92 x 92mm

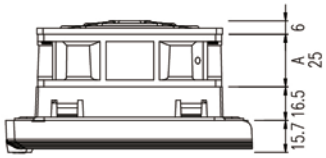

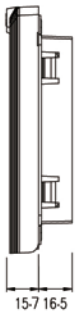

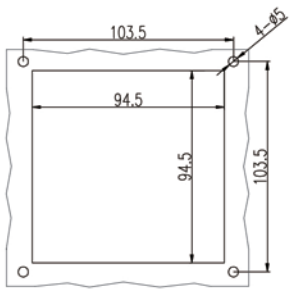

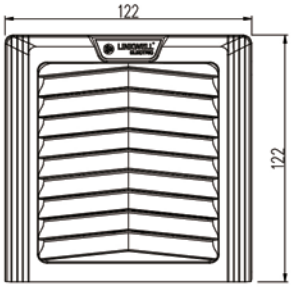

LINKWELL ELECTRIC



FU122-12038.230



FU122.300



IP54 CE RoHS COMPLIANT -20 +70 °C

SPECIFICATION

Fan filter model	FU122-12038.230	FU122-12038.115	FU122-12038.024
Rated voltage	200V-240V AC	100V-125V AC	24V DC
Rated frequency	50/60Hz	50/60Hz	–
Air flow rate, free blowing	65/85m³/h	65/85m³/h	100m³/h
Air flow rate, Equipped with standard filter mat	1×FU122.300: 55/70m³/h		
Axial flow fan	Self starting shaded pole motor		
Rated current	0.12A/0.11A	0.24A/0.22A	0.20A
Power	19/18W	19/18W	4.8W
Noise level	41/42dB(A)	41/42dB(A)	41dB(A)
Operating temperature range	-20°C ~ +70°C	-20°C ~ +70°C	-20°C ~ +70°C
Outlet filter model	FU122.300	FU122.300	FU122.300
Material	Thermoplastic, UL94 V-0 (optional)		
Air flow direction	Air-in as standard; air-out optional		



Enhanced Grill with Higher IP Rating



Easy-open Structure,quicker Maintenance Of Filter Mat



Snap-in Assembly Or Bolts Fasten

DIMENSION (mm) Optional Fan Size:120 x 120mm

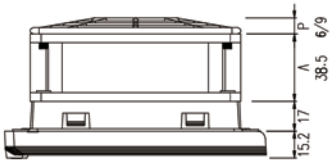



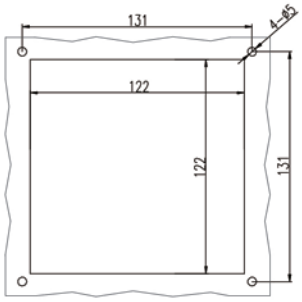

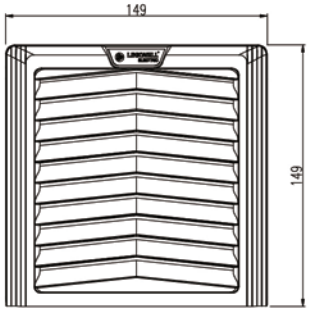

FAN-AND-FILTER FU175 series



FU175-AD-12038.230



FU175.300



IP54 CE RoHS COMPLIANT -20 +70 °C

SPECIFICATION

Fan filter model	FU175-AD-12038.230	FU175-AD-12038.115	FU175-AD-12038.024
Rated voltage	200V-240V AC	100V-125V AC	24V DC
Rated frequency	50/60Hz	50/60Hz	–
Air flow rate, free blowing	105/126m³/h	105/126m³/h	126m³/h
Air flow rate, Equipped with standard filter mat	1×FU175.300: 78/90m³/h		
Axial flow fan	Self starting shaded pole motor		
Rated current	0.12A/0.11A	0.24A/0.22A	0.20A
Power	19/18W	19/18W	4.8W
Noise level	41/42dB(A)	41/42dB(A)	41dB(A)
Operating temperature range	-20°C ~ +70°C	-20°C ~ +70°C	-20°C ~ +70°C
Outlet filter model	FU175.300	FU175.300	FU175.300
Material	Thermoplastic, UL94 V-0 (optional)		
Air flow direction	Air-in as standard; air-out optional		



Enhanced Grill with Higher IP Rating



Easy-open Structure,quicker Maintenance Of Filter Mat



Flexible Fan Size By Embedded Nuts

DIMENSION (mm) Optional Fan Size:120 x 120/150x150/172x150mm

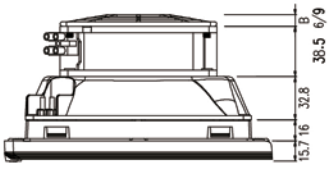



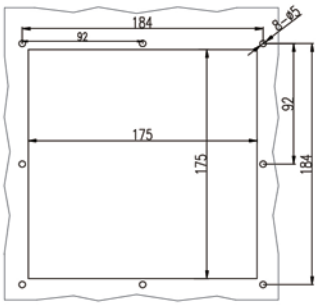

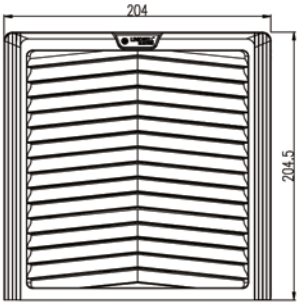



FU223-AD-12038.230



FU223.300



IP54 CE RoHS COMPLIANT -20 +70 °C

SPECIFICATION

Fan filter model	FU223-AD-12038.230	FU223-AD-12038.115	FU223-AD-12038.024
Rated voltage	200V-240V AC	100V-125V AC	24V DC
Rated frequency	50/60Hz	50/60Hz	–
Air flow rate, free blowing	120/125m³/h	120/125m³/h	125m³/h
Air flow rate, Equipped with standard filter mat	1×FU223.300: 78/90m³/h		
Axial flow fan	Self starting shaded pole motor		
Rated current	0.12A/0.11A	0.24A/0.22A	0.20A
Power	19/18W	19/18W	4.8W
Noise level	41/42dB(A)	41/42dB(A)	41dB(A)
Operating temperature range	-20°C ~ +70°C	-20°C ~ +70°C	-20°C ~ +70°C
Outlet filter model	FU223.300	FU223.300	FU223.300
Material	Thermoplastic, UL94 V-0 (optional)		
Air flow direction	Air-in as standard; air-out optional		



Enhanced Grill with Higher IP Rating



Easy-open Structure,quicker Maintenance Of Filter Mat



Flexible Fan Size By Embedded Nuts

DIMENSION (mm)

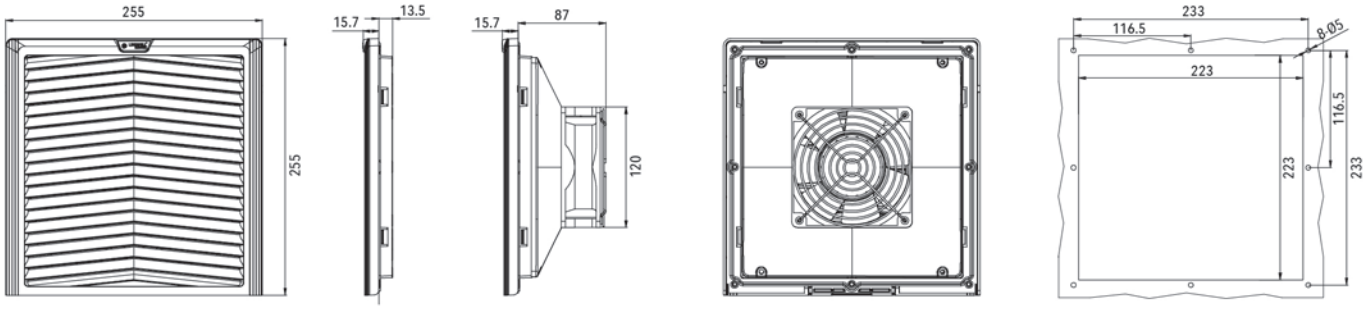

Data page for ref only ,
details & doubts please email: info@linkwell.org



FU223-AD-17251.230



FU223.300



IP54 CE RoHS COMPLIANT -20 +70 °C

SPECIFICATION

Fan filter model	FU223-AD-17251.230	FU223-AD-17251.115	FU223-AD-17251.024
Rated voltage	200V-240V AC	100V-125V AC	24V DC
Rated frequency	50/60Hz	50/60Hz	–
Air flow rate, free blowing	220/240m³/h	220/240m³/h	300m³/h
Air flow rate, Equipped with standard filter mat	1×FU223.300: 115/185m³/h		
Axial flow fan	Self starting shaded pole motor		
Rated current	0.24A/0.22A	0.45A/0.42A	0.50A
Power	38/36W	38/36W	12W
Noise level	50/52dB(A)	50/52dB(A)	50dB(A)
Operating temperature range	-20°C ~ +70°C	-20°C ~ +70°C	-20°C ~ +70°C
Outlet filter model	FU223.300	FU223.300	FU223.300
Material	Thermoplastic, UL94 V-0 (optional)		
Air flow direction	Air-in as standard; air-out optional		



Air Duct Options For Bigger Air Flow



Easy-open Structure,quicker Maintenance Of Filter Mat



Flexible Fan Size By Embedded Nuts

DIMENSION (mm) Optional Fan Size:180 x60/205x72/220x60/172x51/172 x55/225x80mm

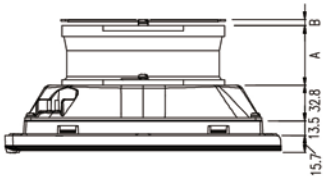



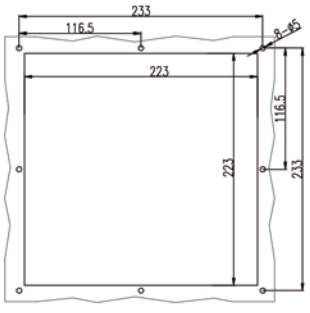

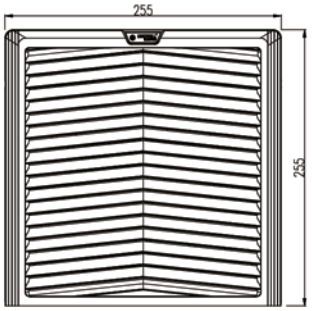



FU223-AD-18060.230



FU223.300



IP54 CE RoHS COMPLIANT -20 +70 °C

SPECIFICATION

Fan filter model	FU223-AD-18060.230	FU223-AD-18060.115
Rated voltage	200V-240V AC	100V-125V AC
Rated frequency	50/60Hz	50/60Hz
Air flow rate, free blowing	330/370m³/h	330/370m³/h
Air flow rate, Equipped with standard filter mat	1×FU223.300: 230/260m³/h	
Axial flow fan	Self starting shaded pole motor	
Rated current	0.35A/0.32A	0.54A/0.52A
Power	42/40W	42/40W
Noise level	50/52dB(A)	50/52dB(A)
Operating temperature range	-20°C ~ +70°C	-20°C ~ +70°C
Outlet filter model	FU223.300	FU223.300
Material	Thermoplastic, UL94 V-0 (optional)	
Air flow direction	Air-in as standard; air-out optional	



Air Duct Options For Bigger Air Flow



Easy-open Structure,quicker Maintenance Of Filter Mat



Flexible Fan Size By Embedded Nuts

DIMENSION (mm)

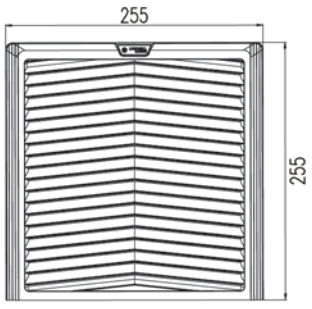

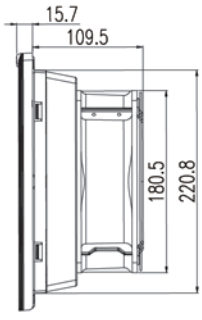

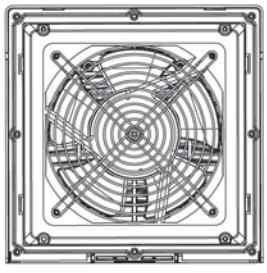

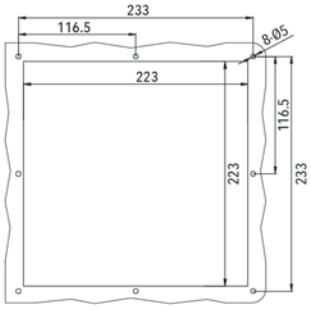



FU223-AD-20060.230



FU223.300



IP54 CE RoHS COMPLIANT -20 +70 °C

SPECIFICATION

Fan filter model	FU223-AD-20060.230	FU223-AD-20060.115	FU223-AD-20060.24
Rated voltage	200V-240V AC	100V-125V AC	24V AC
Rated frequency	50/60Hz	50/60Hz	-
Air flow rate, free blowing	420/430m³/h	420/430m³/h	290m³/h
Air flow rate, Equipped with standard filter mat	1×FU223.300: 295/300m³/h		
Axial flow fan	Self starting shaded pole motor		
Rated current	0.35A/0.32A	0.60A/0.58A	1.6A
Power	45/42W	45/42W	38W
Noise level	50/52dB(A)	50/52dB(A)	64dB(A)
Operating temperature range	-20°C ~ +70°C	-20°C ~ +70°C	-20°C ~ +65°C
Outlet filter model	FU223.300	FU223.300	FU223.300
Material	Thermoplastic, UL94 V-0 (optional)		
Air flow direction	Air-in as standard; air-out optional		



Air Duct Options For Bigger Air Flow



Easy-open Structure,quicker Maintenance Of Filter Mat



Flexible Fan Size By Embedded Nuts

DIMENSION (mm)

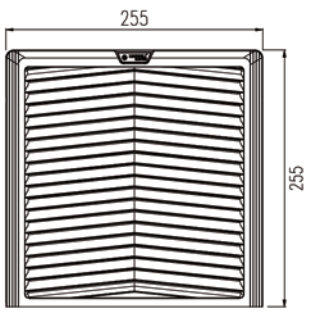

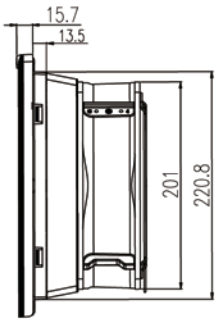



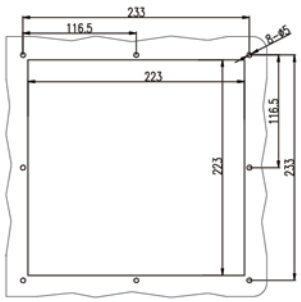



FU223-AD-20572.230



FU223.300



IP54 CE RoHS COMPLIANT -20 +70 °C

SPECIFICATION

Fan filter model	FU223--AD-20572.230	FU223--AD-20572.115
Rated voltage	200V-240V AC	100V-125V AC
Rated frequency	50/60Hz	50/60Hz
Air flow rate, free blowing	700/750m³/h	700/750m³/h
Air flow rate, Equipped with standard filter mat	1×FU223.300: 490/525m³/h	
Axial flow fan	Self starting shaded pole motor	
Rated current	0.30A/0.35A	0.60A/0.70A
Power	60/80W	60/80W
Noise level	50/52dB(A)	50/52dB(A)
Operating temperature range	-20°C ~ +70°C	-20°C ~ +70°C
Outlet filter model	FU223.300	FU223.300
Material	Thermoplastic, UL94 V-0 (optional)	
Air flow direction	Air-in as standard; air-out optional	



Air Duct Options For Bigger Air Flow



Easy-open Structure,quicker Maintenance Of Filter Mat



Flexible Fan Size By Embedded Nuts

DIMENSION (mm)

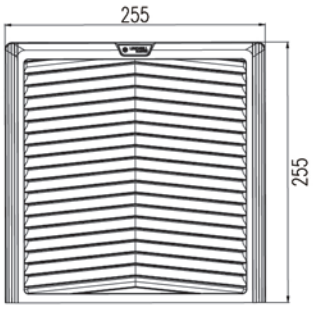

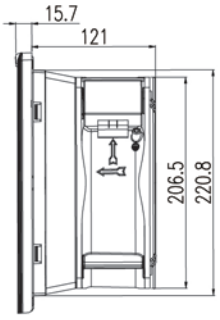



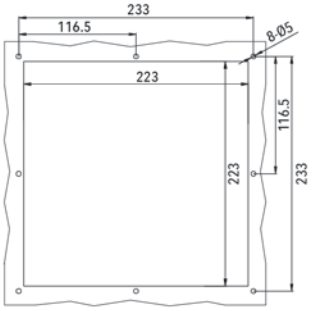



FU283-AD-22580.230



FU283.300



IP54 CE RoHS COMPLIANT -20 +70 ℃

SPECIFICATION

Fan filter model	FU283-AD-22580.230	FU283-AD-22580.115
Rated voltage	200V-240V AC	100V-125V AC
Rated frequency	50/60Hz	50/60Hz
Air flow rate, free blowing	550/600m³/h	550/600m³/h
Air flow rate, Equipped with standard filter mat	1×FU283.300: 380/410m³/h	
Axial flow fan	Capacitor operated	
Rated current	0.30A/0.35A	0.55A/0.65 A
Power	55/65W	55/65W
Noise level	59/61dB(A)	59/61dB(A)
Operating temperature range	-20°C ~ +70°C	-20°C ~ +70°C
Outlet filter model	FU283.300	FU283.300
Material	Thermoplastic, UL94 V-0 (optional)	
Air flow direction	Air-in as standard; air-out optional	



Air Duct Options For Bigger Air Flow



Easy-open Structure,quicker Maintenance Of Filter Mat



Flexible Fan Size By Embedded Nuts

DIMENSION (mm) Optional Fan Size:205 x72/220x60/254x89/220x60/225 x80/280x80mm

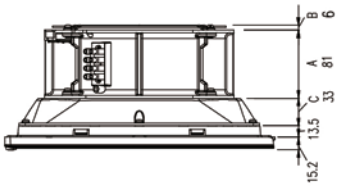



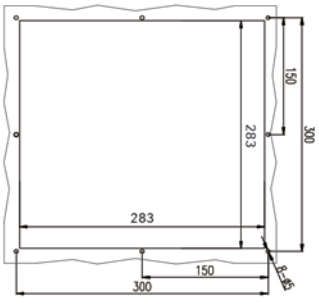

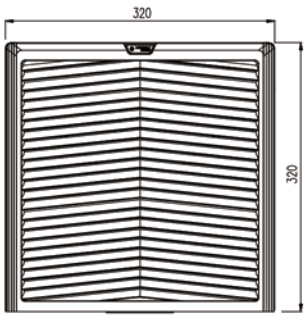



FU292-AD-22580.230



FU292.300



IP54 CE RoHS COMPLIANT -20 +70 ℃

SPECIFICATION

Fan filter model	FU292-AD-22580.230	FU292-AD-22580.115
Rated voltage	200V-240V AC	100V-125V AC
Rated frequency	50/60Hz	50/60Hz
Air flow rate, free blowing	550/600m³/h	550/600m³/h
Air flow rate, Equipped with standard filter mat	1×FU292.300: 380/410m³/h	
Axial flow fan	Capacitor operated	
Rated current	0.30A/0.35A	0.55A/0.65A
Power	55/65W	55/65W
Noise level	59/61dB(A)	59/61dB(A)
Operating temperature range	-20°C ~ +70°C	-20°C ~ +70°C
Outlet filter model	FU292.300	FU292.300
Material	Thermoplastic, UL94 V-0 (optional)	
Air flow direction	Air-in as standard; air-out optional	



Air Duct Options For Bigger Air Flow



Easy-open Structure,quicker Maintenance Of Filter Mat



Flexible Fan Size By Embedded Nuts

DIMENSION (mm) Optional Fan Size:205 x72/200x60/254x89/220x60/225 x80/280x80mm

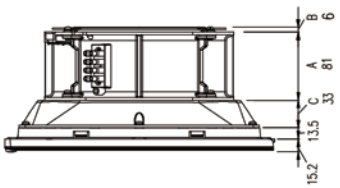



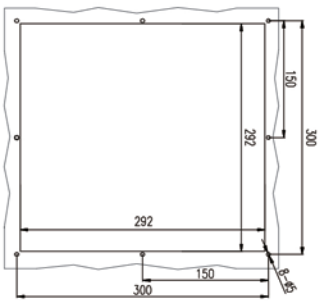

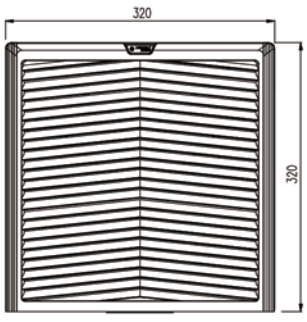



FU292-D.230



FU292.300



IP54 CE RoHS COMPLIANT -20 +70 ℃

SPECIFICATION

Fan filter model	FU292-D.230	FU292-D.115
Rated voltage	200V-240V AC	100V-125V AC
Rated frequency	50/60Hz	50/60Hz
Air flow rate, free blowing	1150/1350m³/h	1150/1350m³/h
Air flow rate, Equipped with standard filter mat	1×FU292.300: 750/950m³/h	
Axial flow fan	Capacitor operated	
Rated current	0.55A/0.65A	1.0A/1.1A
Power	110/150W	110/150W
Noise level	68/71dB(A)	68/71dB(A)
Operating temperature range	-20°C ~ +70°C	-20°C ~ +70°C
Outlet filter model	FU292.300	FU292.300
Material	Thermoplastic, UL94 V-0 (optional)	
Air flow direction	Air-in as standard; air-out optional	



Enhanced Grill with Higher IP Rating



Easy-open Structure,quicker Maintenance Of Filter Mat



Flexible Fan Size By Embedded Nuts

DIMENSION (mm) Optional Fan Size:205 x72/200x60/254x89 /220x60/225 x80/280x80mm

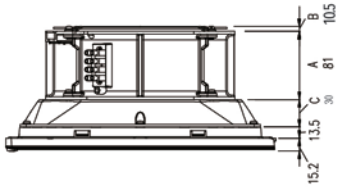



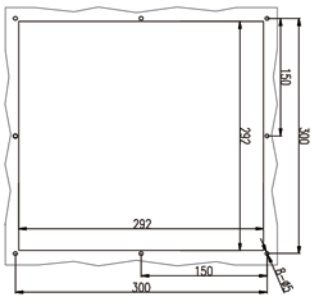

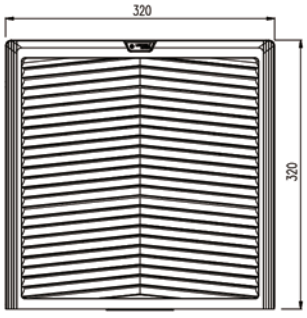

FU392-12038 FAN-AND-FILTER



FU392-12038.230



IP54 CE RoHS COMPLIANT -20 +70 ℃

SPECIFICATION

Fan filter model	FU392-12038.230	FU392-12038.115	FU392-12038.024
Rated voltage	200V-240V AC	100V-125V AC	24V DC
Rated frequency	50/60Hz	50/60Hz	–
Air flow rate, free blowing	280/305m³/h	280/305m³/h	300m³/h
Air flow rate, Equipped with standard filter mat	1×FU392.300: 196/213m³/h		
Axial flow fan	Self starting shaded pole motor		
Rated current	0.36A/0.33A	0.70A/0.65A	0.60A
Power	57/54W	57/54W	12W
Noise level	41/42dB(A)	41/42dB(A)	41dB(A)
Operating temperature range	-20°C ~ +70°C	-20°C ~ +70°C	-20°C ~ +70°C
Outlet filter model	FU392.300	FU392.300	FU392.300
Material	Thermoplastic, UL94 V-0 (optional)		
Air flow direction	Air-in as standard; air-out optional		



Enhanced Grill with Higher IP Rating



Easy-open Structure,quicker Maintenance Of Filter Mat



Snap-in Assembly Or Bolts Fasten

DIMENSION (mm)

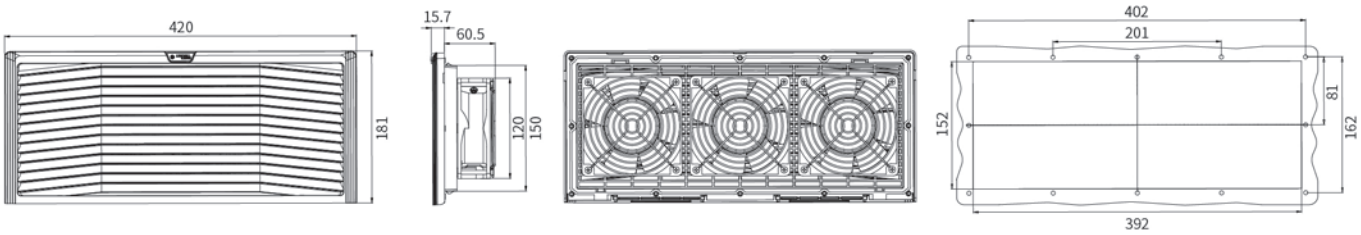

Data page for ref only ,
details & doubts please email: info@linkwell.org



FK95-9225.230



FK95.300



IP54 CE RoHS COMPLIANT -20 +65 °C

SPECIFICATION

Fan filter model	FK95-9225.230	FK95-9225.115	FK95-9225.024
Rated voltage	200V-240V AC	100V-125V AC	24V DC
Rated frequency	50/60Hz	50/60Hz	-
Air flow rate, free blowing	25/35m³/h	25/35m³/h	35m³/h
Air flow rate, Equipped with standard filter mat	1×FK95.300: 20/25m³/h		
Axial flow fan	Self starting shaded pole motor		
Rated current	0.07A/0.06A	0.12A/0.11A	0.08A
Power	12/11W	12/11W	1.98W
Noise level	37/41dB(A)	32/35dB(A)	35dB(A)
Operating temperature range	-20°C ~ +65°C	-20°C ~ +65°C	-20°C ~ +65°C
Outlet filter model	FK95.300	FK95.300	FK95.300
Material	Thermoplastic, UL94 V-0 (optional)		
Air flow direction	Air-in as standard; air-out optional		



Enhanced Grill with Higher IP Rating



Easy-open Structure,quicker Maintenance Of Filter Mat



Flexible Fan Size By Embedded Nuts

DIMENSION (mm) Optional Fan Size:92 x92mm

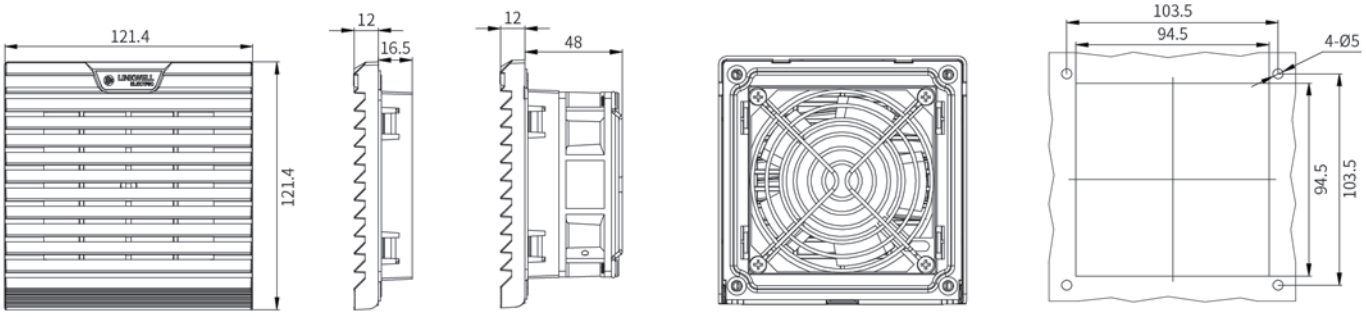

FAN-AND-FILTER FK122 series



FK122-12038.230



FK122.300



IP54 CE RoHS COMPLIANT -20 +65 °C

SPECIFICATION

Fan filter model	FK122-12038.230	FK122-12038.115	FK122-12038.024
Rated voltage	200V-240V AC	100V-125V AC	24V DC
Rated frequency	50/60Hz	50/60Hz	-
Air flow rate, free blowing	65/85m³/h	65/85m³/h	100m³/h
Air flow rate, Equipped with standard filter mat	1×FK122.300: 55/70m³/h		
Axial flow fan	Self starting shaded pole motor		
Rated current	0.12A/0.11A	0.24A/0.22A	0.2A
Power	19/18W	19/18W	4.8W
Noise level	41/42dB(A)	41/42dB(A)	41dB(A)
Operating temperature range	-20°C ~ +65°C	-20°C ~ +65°C	-20°C ~ +65°C
Outlet filter model	FK122.300	FK122.300	FK122.300
Material	Thermoplastic, UL94 V-0 (optional)		
Air flow direction	Air-in as standard; air-out optional		



Enhanced Grill with Higher IP Rating



Easy-open Structure,quicker Maintenance Of Filter Mat



Flexible Fan Size By Embedded Nuts

DIMENSION (mm) Optional Fan Size:120 x120mm

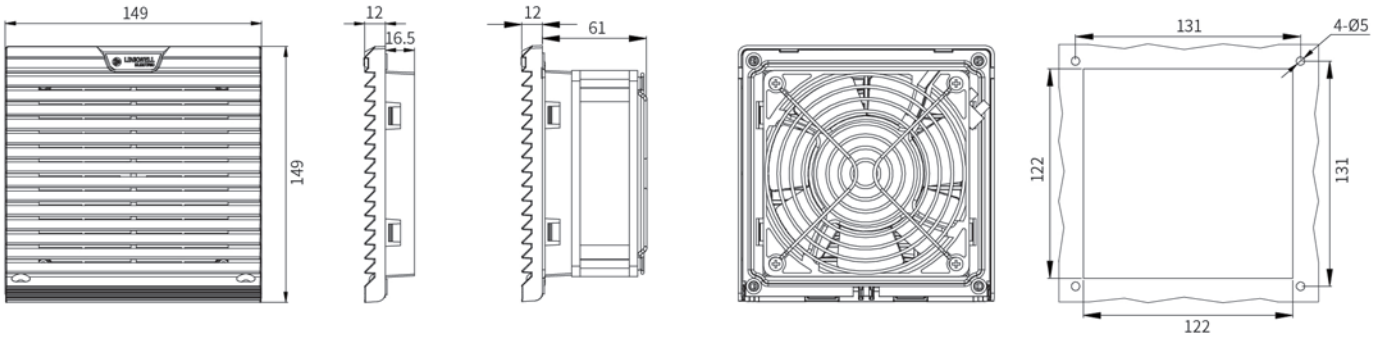



FK175-AD-12038.230



FK175.300



IP54 CE RoHS COMPLIANT -20 +65 °C

SPECIFICATION

Fan filter model	FK175-AD-12038.230	FK175-AD-12038.115	FK175-AD-12038.024
Rated voltage	200V-240V AC	100V-125V AC	24V DC
Rated frequency	50/60Hz	50/60Hz	—
Air flow rate, free blowing	105/126m³/h	105/126m³/h	126m³/h
Air flow rate, Equipped with standard filter mat	1×FK175.300: 78/90m³/h		
Axial flow fan	Self starting shaded pole motor		
Rated current	0.12A/0.11A	0.24A/0.22A	0.20A
Power	19/18W	19/18W	4.8W
Noise level	41/42dB(A)	41/42dB(A)	41dB(A)
Operating temperature range	-20°C ~ +70°C	-20°C ~ +70°C	-20°C ~ +70°C
Outlet filter model	FK175.300	FK175.300	FK175.300
Material	Thermoplastic, UL94 V-0 (optional)		
Air flow direction	Air-in as standard; air-out optional		



Enhanced Grill with Higher IP Rating



Easy-open Structure,quicker Maintenance Of Filter Mat



Flexible Fan Size By Embedded Nuts

DIMENSION (mm) Optional Fan Size:120 x120/150x150/172x150mm

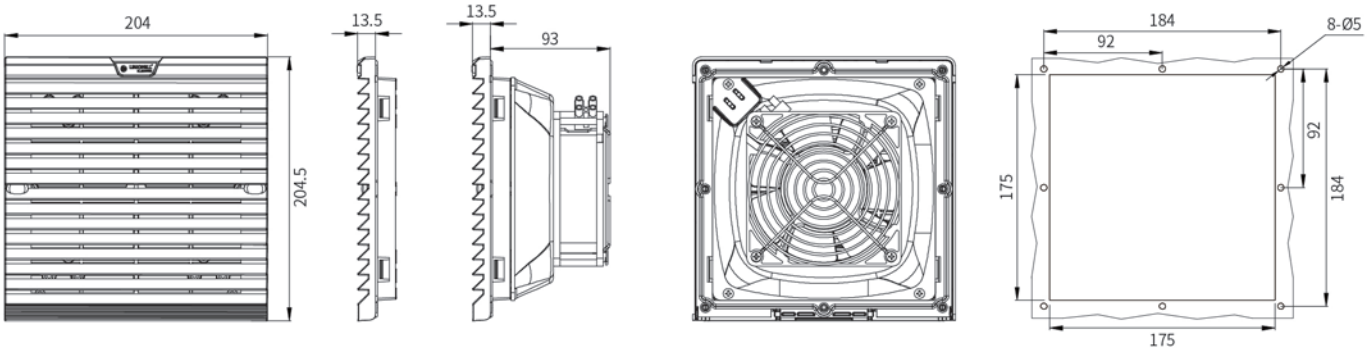

Data page for ref only ,
details & doubts please email: info@linkwell.org

FAN-AND-FILTER FK223 series



FK223-AD-17251.230



FK223.300



IP54 CE RoHS COMPLIANT -20 +65 °C

SPECIFICATION

Fan filter model	FK223-AD-17251.230	FK223-AD-17251.115	FK223-AD-17251.024
Rated voltage	200V-240V AC	100V-125V AC	24V DC
Rated frequency	50/60Hz	50/60Hz	—
Air flow rate, free blowing	220/240m³/h	220/240m³/h	300m³/h
Air flow rate, Equipped with standard filter mat	1×FK223.300: 115/185m³/h		
Axial flow fan	Self starting shaded pole motor		
Rated current	0.24A/0.22A	0.45A/0.42A	0.50A
Power	38/36W	38/36W	12W
Noise level	50/52dB(A)	50/52dB(A)	50dB(A)
Operating temperature range	-20°C ~ +70°C	-20°C ~ +70°C	-20°C ~ +70°C
Outlet filter model	FK223.300	FK223.300	FK223.300
Material	Thermoplastic, UL94 V-0 (optional)		
Air flow direction	Air-in as standard; air-out optional		



Enhanced Grill with Higher IP Rating



Easy-open Structure,quicker Maintenance Of Filter Mat



Flexible Fan Size By Embedded Nuts

DIMENSION (mm) Optional Fan Size:172x51/172x55/180x60/205x72/220x60mm

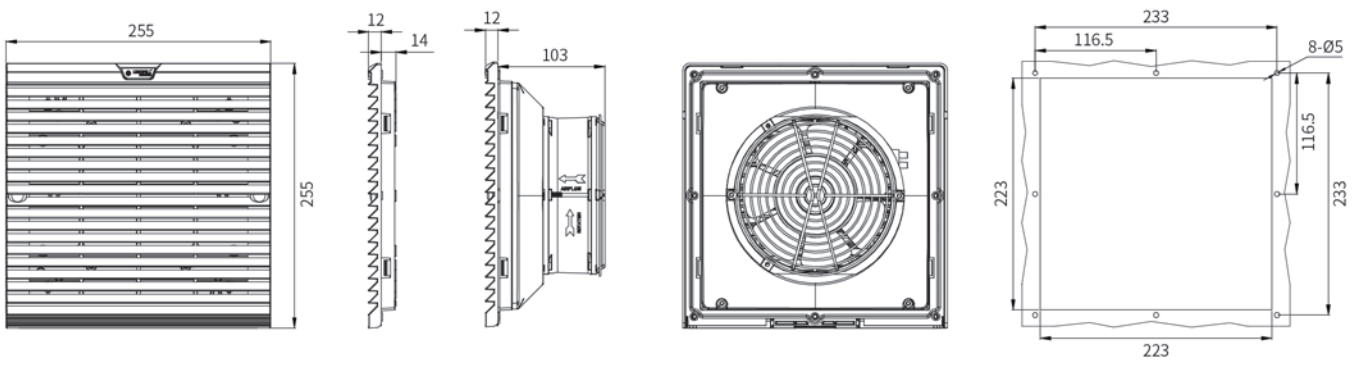



FK223-AD-18060.230



FK223.300



IP54 CE RoHS COMPLIANT -20 +65 °C

SPECIFICATION

Fan filter model	FK223-AD-18060.230	FK223-AD-18060.115
Rated voltage	200V-240V AC	100V-125V AC
Rated frequency	50/60Hz	50/60Hz
Air flow rate, free blowing	330/370m³/h	330/370m³/h
Air flow rate, Equipped with standard filter mat	1×FK223.300: 230/260m³/h	
Axial flow fan	Self starting shaded pole motor	
Rated current	0.35A/0.32A	0.54A/0.52A
Power	42/40W	42/40W
Noise level	63/65dB(A)	63/65dB(A)
Operating temperature range	-20°C ~ +65°C	-20°C ~ +65°C
Outlet filter model	FK223.300	FK223.300
Material	Thermoplastic, UL94 V-0 (optional)	
Air flow direction	Air-in as standard; air-out optional	



Enhanced Grill with Higher IP Rating



Easy-open Structure,quicker Maintenance Of Filter Mat



Flexible Fan Size By Embedded Nuts

DIMENSION (mm)

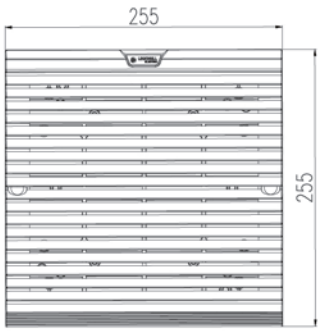

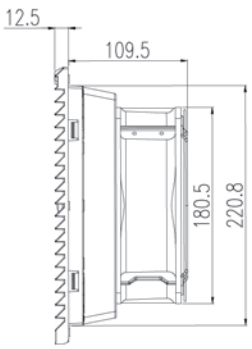

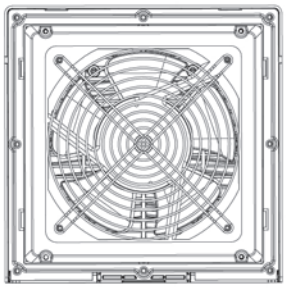

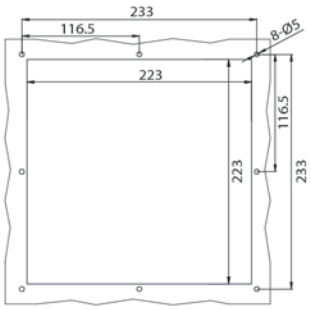

FAN-AND-FILTER FK223-AD-20060 series



FK223-AD-20060.230



FK223.300



IP54 CE RoHS COMPLIANT -20 +65 °C

SPECIFICATION

Fan filter model	FK223-AD-20060.230	FK223-AD-20060.115
Rated voltage	200V-240V AC	100V-125V AC
Rated frequency	50/60Hz	50/60Hz
Air flow rate, free blowing	420/430m³/h	420/430m³/h
Air flow rate, Equipped with standard filter mat	1×FK223.300: 295/300m³/h	
Axial flow fan	Self starting shaded pole motor	
Rated current	0.35A/0.32A	0.60A/0.58A
Power	45/42W	45/42W
Noise level	63/65dB(A)	63/65dB(A)
Operating temperature range	-20°C ~ +65°C	-20°C ~ +65°C
Outlet filter model	FK223.300	FK223.300
Material	Thermoplastic, UL94 V-0 (optional)	
Air flow direction	Air-in as standard; air-out optional	



Enhanced Grill with Higher IP Rating



Easy-open Structure,quicker Maintenance Of Filter Mat



Flexible Fan Size By Embedded Nuts

DIMENSION (mm)

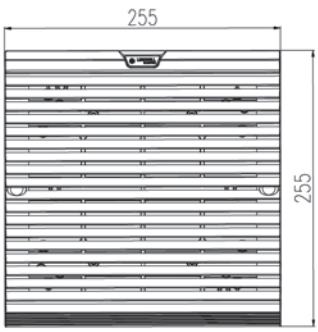

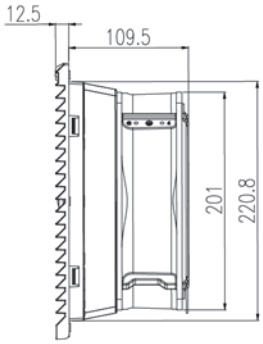

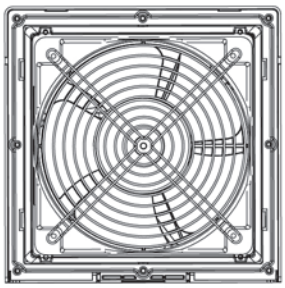

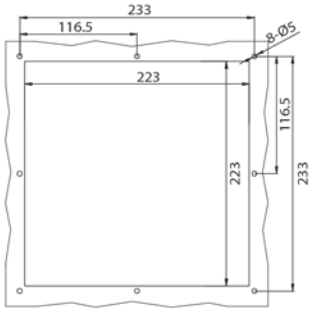



FK223-AD-20572.230



FK223.300



IP54 CE RoHS COMPLIANT -20 +65 °C

SPECIFICATION

Fan filter model	FK223-AD-20572.230	FK223-AD-20572.115
Rated voltage	200V-240V AC	100V-125V AC
Rated frequency	50/60Hz	50/60Hz
Air flow rate, free blowing	700/750m³/h	700/750m³/h
Air flow rate, Equipped with standard filter mat	1×FK223.300: 490/525m³/h	
Axial flow fan	Self starting shaded pole motor	
Rated current	0.30A/0.35A	0.60A/0.70A
Power	60/80W	60/80W
Noise level	63/65dB(A)	63/65dB(A)
Operating temperature range	-20°C ~ +65°C	-20°C ~ +65°C
Outlet filter model	FK223.300	FK223.300
Material	Thermoplastic, UL94 V-0 (optional)	
Air flow direction	Air-in as standard; air-out optional	



Enhanced Grill with Higher IP Rating



Easy-open Structure,quicker Maintenance Of Filter Mat



Flexible Fan Size By Embedded Nuts

DIMENSION (mm)

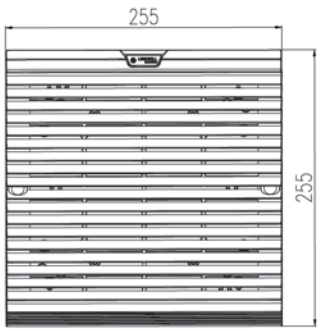

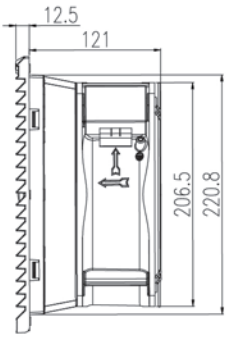



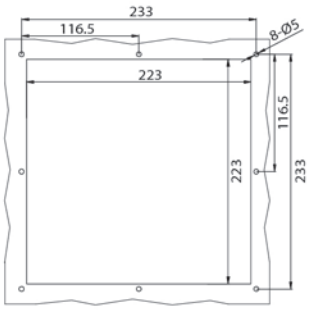

FK283 series FAN-AND-FILTER



FK283-AD-22580.230



FK283.300



IP54 CE RoHS COMPLIANT -20 +65 °C

SPECIFICATION

Fan filter model	FK283-AD-22580.230	FK283-AD-22580.115
Rated voltage	200V-240V AC	100V-125V AC
Rated frequency	50/60Hz	50/60Hz
Air flow rate, free blowing	550/600m³/h	550/600m³/h
Air flow rate, Equipped with standard filter mat	1×FK283.300: 380/410m³/h	
Axial flow fan	Capacitor operated	
Rated current	0.30A/0.35A	0.55A/0.65 A
Power	55/65W	55/65W
Noise level	59/61dB(A)	59/61dB(A)
Operating temperature range	-20°C ~ +70°C	-20°C ~ +70°C
Outlet filter model	FK283.300	FK283.300
Material	Thermoplastic, UL94 V-0 (optional)	
Air flow direction	Air-in as standard; air-out optional	



Enhanced Grill with Higher IP Rating



Easy-open Structure,quicker Maintenance Of Filter Mat



Flexible Fan Size By Embedded Nuts

DIMENSION (mm) Optional Fan Size:205x72/220x60/254x89/220x60/225x80/280x80mm

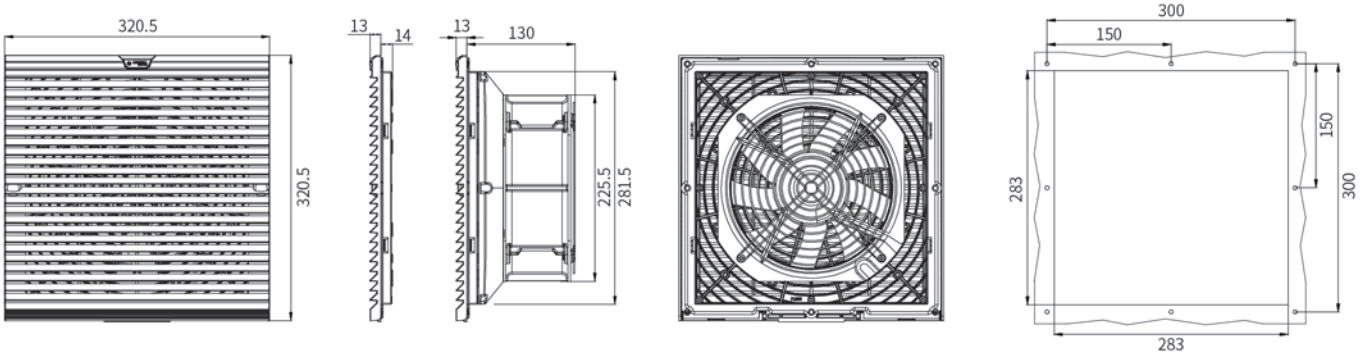

Data page for ref only ,
details & doubts please email: info@linkwell.org

FAN-AND-FILTER RC9802 series

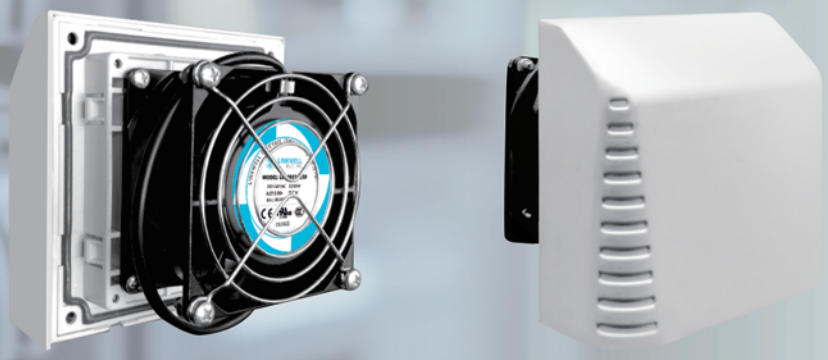

IP55 CE RoHS COMPLIANT -15 +55 °C

SPECIFICATION

Model	RC9802.230	RC9802.110	RC9802.024
Voltage/Frequency	230V AC 50/60Hz	110V AC 50/60Hz	24V DC
Power	13W	13W	6W
Electric current	0.09A	0.17A	0.085A
Dimension-Includingfans	119x119x98mm		
Dimension	119x119x60mm		
Noise	33dB(A)		
Combined airvolume	18m³/h		
Operating temperature range	-15°C~+55°C		
Combination weight	0.7kg		
Single weight	0.2kg		
Dust removal rate	87%		
Colour	RAL7035		
Available fan	80x80		
Filter Grade	G4		
IP code	IP55		

DIMENSION (mm)

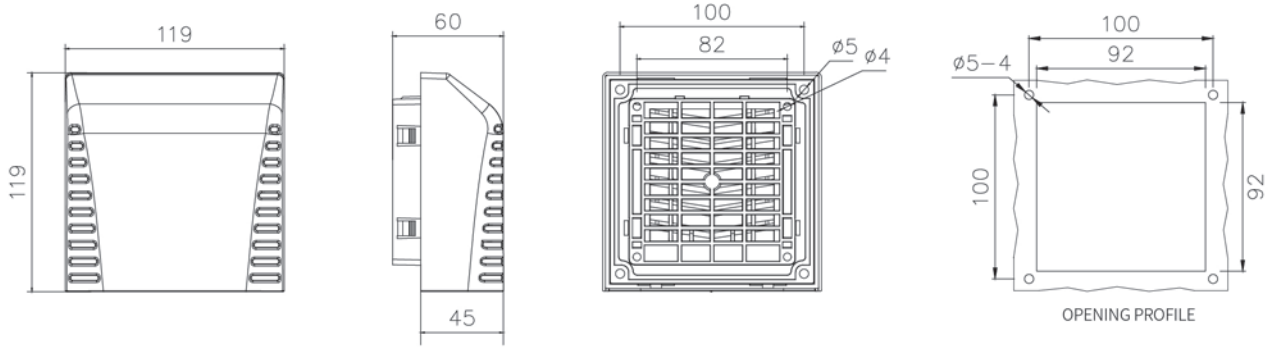

RC9803 series FAN-AND-FILTER





IP55 CE RoHS COMPLIANT -15 +55 °C

SPECIFICATION

Model	RC9803.230	RC9803.110	RC9803.024
Voltage/Frequency	230V AC 50/60Hz	110V AC 50/60Hz	24V DC
Power	19W/18W	19W/18W	4.8W
Electric current	0.12A/0.11A	0.24A/0.22A	0.20A
Dimension-Includingfans	152x152x108mm		
Dimension	152x152x70mm		
Noise	44dB(A)		
Combined airvolume	35m³/h		
The use ofbearing	-15°C~+55°C		
Combination weight	0.9kg		
Single weight	0.33kg		
Dust removal rate	87%		
Colour	RAL7035		
Available fan	120x120	80x80	92x92
Filter Grade	G4		
IP code	IP55		

DIMENSION (mm)

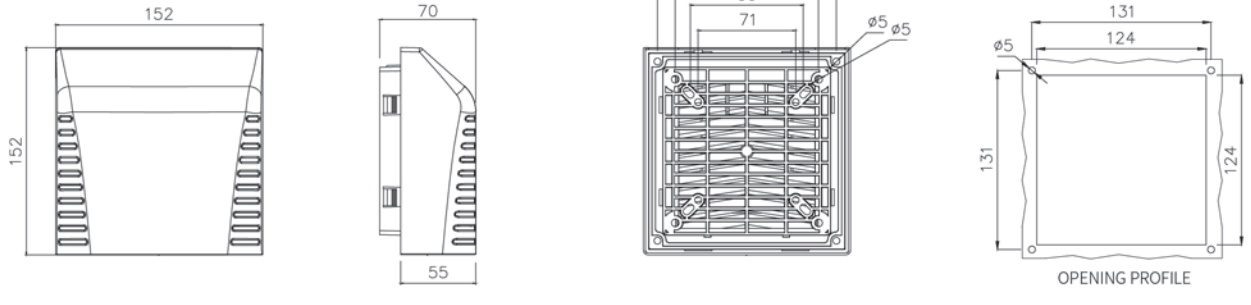

Data page for ref only ,
details & doubts please email: info@linkwell.org

FAN-AND-FILTER RC9804 series

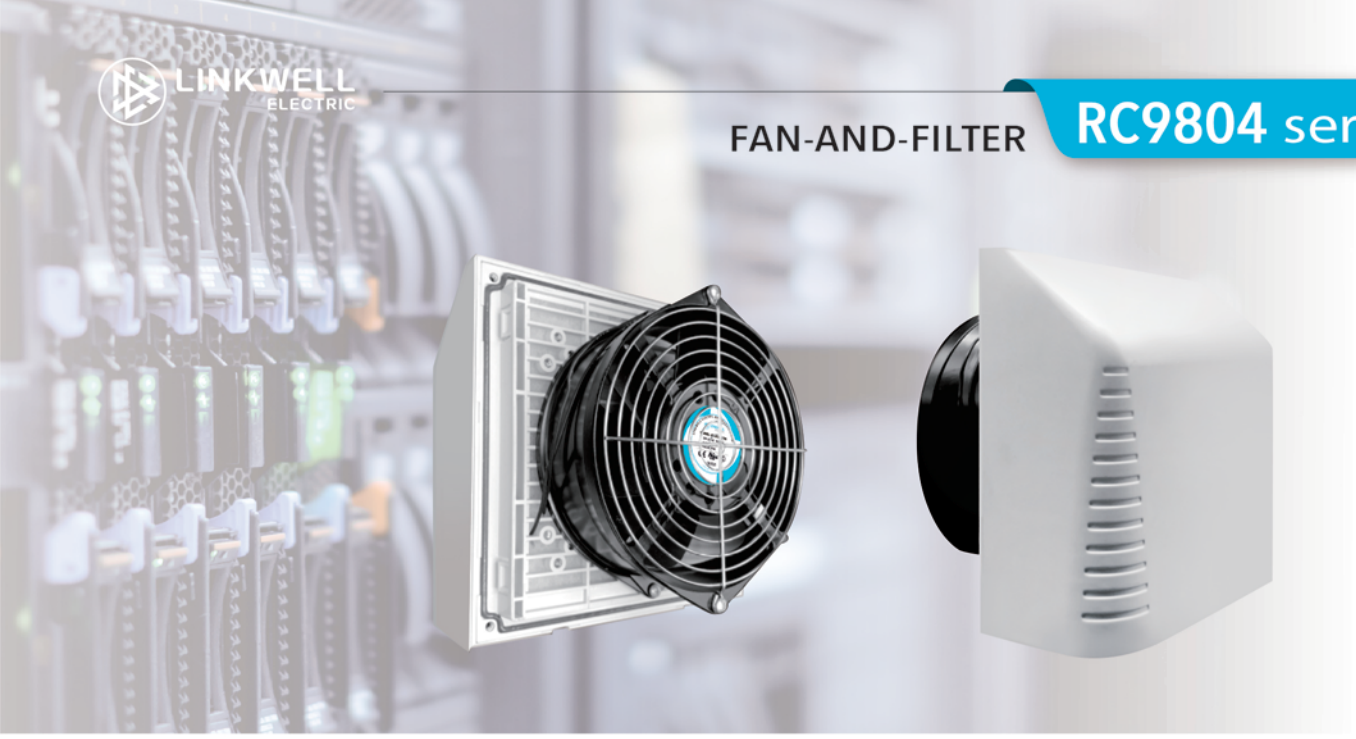

IP55 CE RoHS COMPLIANT -15 +55 °C

SPECIFICATION

Model	RC9804.230	RC9804.110	RC9804.024
Voltage/Frequency	230V AC 50/60Hz	110V AC 50/60Hz	24V DC
Power	38W/36W	38W/36W	12W
Electric current	0.57A	0.45A/0.42A	0.5A
Dimension-Includingfans	206x206x142mm		
Dimension	206x206x85mm		
Noise	62dB(A)		
Combined airvolume	93m³/h		150m³/h
The use ofbearing	-15°C~+55°C		
Combination weight	1.7kg		
Single weight	0.55kg		
Dust removal rate	87%		
Colour	RAL7035		
Available fan	120x120，150x150，172x150		
Filter Grade	G4		
IP code	IP55		

DIMENSION (mm)

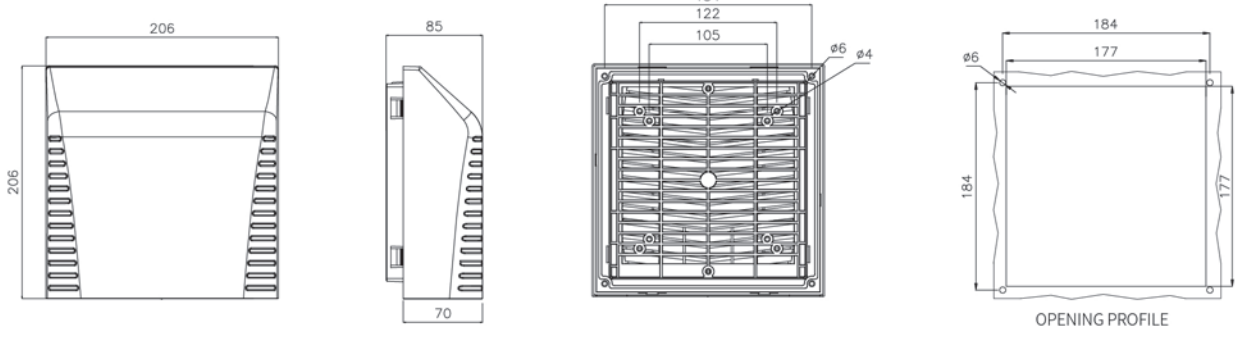

RC9805 series FAN-AND-FILTER



IP55 CE RoHS COMPLIANT -15 +55 °C

SPECIFICATION

Model	RC9805.230	RC9805.110	RC9805.024
Voltage/Frequency	230V AC 50/60Hz	110V AC 50/60Hz	24V DC
Power	45W	45W	35W
Electric current	0.35A	0.60A	1.4A
Dimension-Includingfans	258x258x151mm		
Dimension	258x258x91mm		
Noise	44dB(A)		
Combined airvolume	90m³/h		
The use ofbearing	-15℃~+55℃		
Combination weight	1.5kg		
Single weight	0.86kg		
Dust removal rate	87%		
Colour	RAL7035		
Available fan	172x150，180x180，150x150，200x200		
Filter Grade	G4		
IP code	IP55		

DIMENSION (mm)

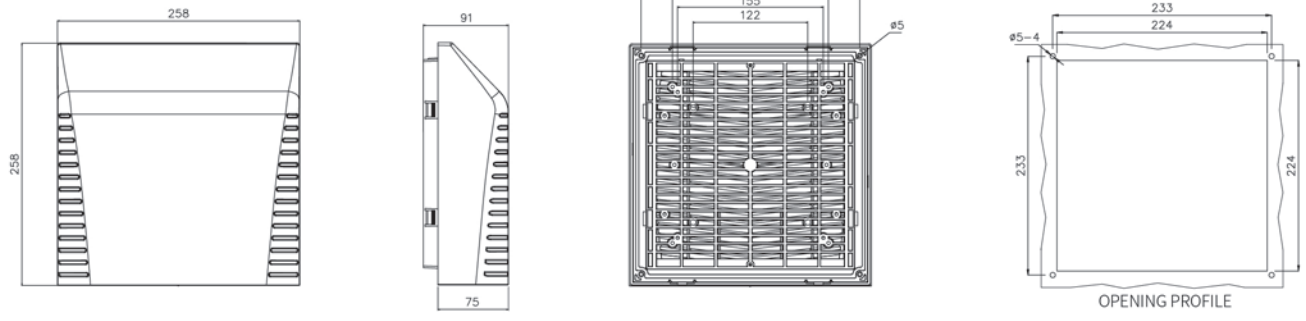

Data page for ref only ,
details & doubts please email: info@linkwell.org

FAN-AND-FILTER RC9806 series



IP55 CE RoHS COMPLIANT -15 +55 °C

SPECIFICATION

Model	RC9806.230	RC9806.110	RC9806.024
Voltage/Frequency	230V AC 50/60Hz	110V AC 50/60Hz	24V DC
Power	110W/150W	110W/150W	96W
Electric current	0.55A/0.65A	1.0A/1.1A	4.0A
Dimension-Includingfans	323x323x175mm		
Dimension	323x323x95mm		
Noise	65dB(A)		
Combined airvolume	470m³/h		
The use ofbearing	-15°C~+55°C		
Combination weight	3.2kg		
Single weight	1.1kg		
Dust removal rate	87%		
Colour	RAL7035		
Available fan	172x150，200x200，∅254，280x280		
Filter Grade	G4		
IP code	IP55		

DIMENSION (mm)

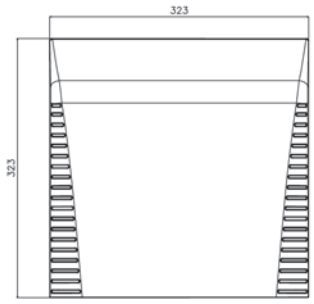



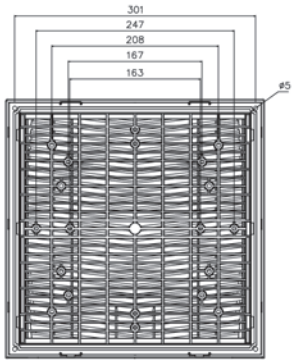

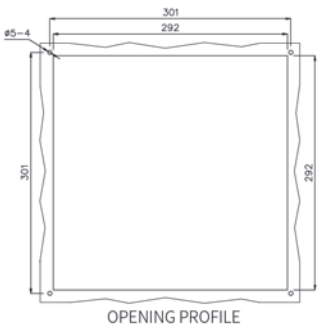

OPENING PROFILE



LKF184



LKF240

IP55 CE RoHS COMPLIANT -20 +60 °C

SPECIFICATION

Model	LKF184	LKF240
Dimension	186x184x68mm	242x240x68mm
The use of bearing	-20°C~+60°C	-20°C~+60°C
Single weight	0.18kg	0.29kg
Dust removal rate	87%	87%
Colour	RAL7035	RAL7035
IP code(with filter assembly)	IP55	IP55
Certificate	CE, ROHS	CE, ROHS



with filter assembly

DIMENSION (mm)

LKF184

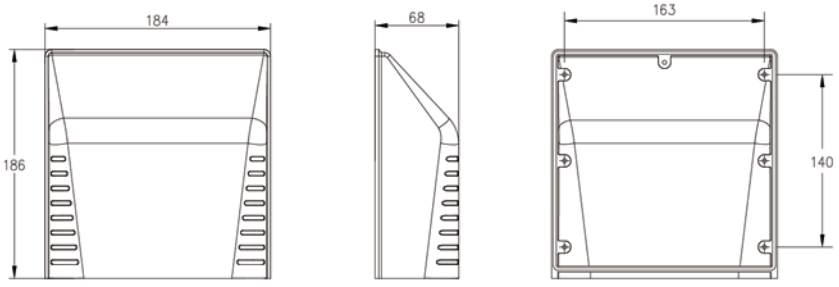

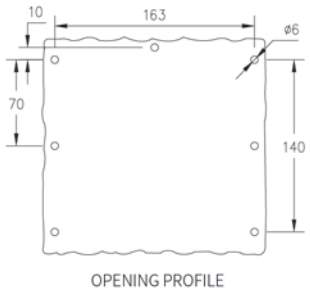

OPENING PROFILE

LKF240

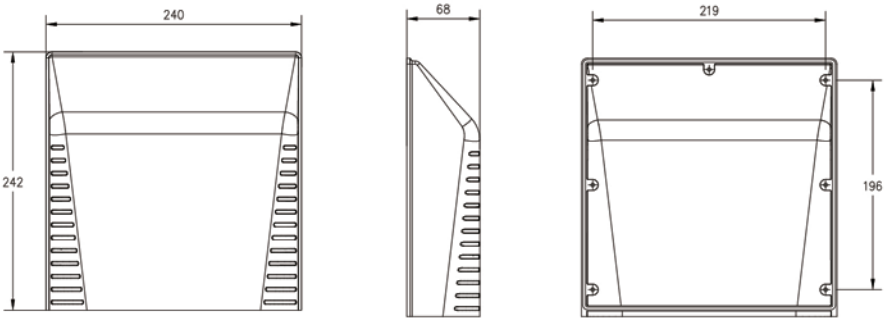

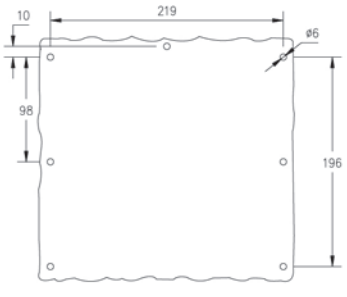

OPENING PROFILE




LKF290




LKF357

IP55 CE RoHS COMPLIANT -20 +60 °C

SPECIFICATION

Model	LKF290	LKF357
Dimension	292x290x68mm	360x357x69mm
The use of bearing	-20°C~+60°C	-20°C~+60°C
Single weight	0.43kg	0.62kg
Dust removal rate	87%	87%
Colour	RAL7035	RAL7035
IP code(with filter assembly)	IP55	IP55
Certificate	CE, ROHS	CE, ROHS



with filter assembly

DIMENSION (mm)

LKF290

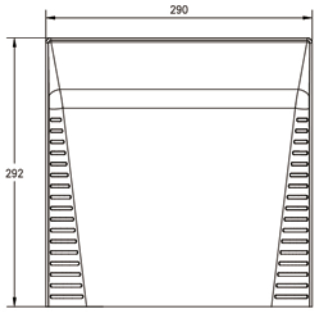



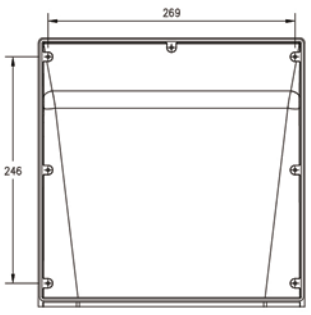

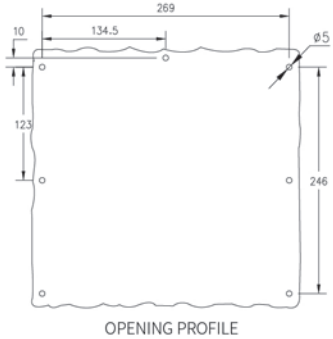

OPENING PROFILE

LKF357

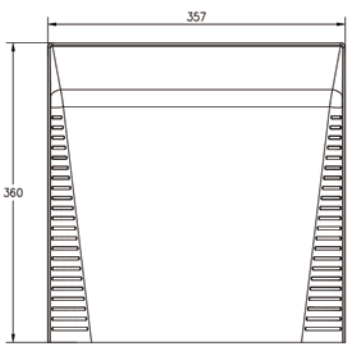



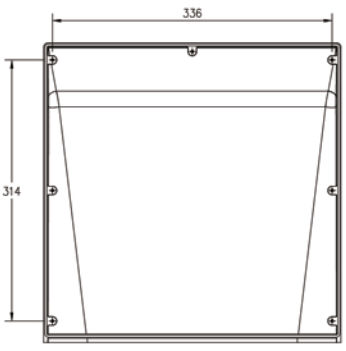

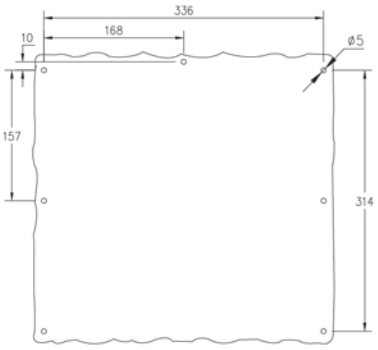

OPENING PROFILE

ROOF VENTILATOR





CABINET ROOF FAN F2E-DH series

Installation conditions

- Small size and light weight
- Not occupying excess space
- Adopting high-performance, industrial grade ball bearing fans
- Completely reduce the internal temperature of the cabinet in a short period of time

SPECIFICATION

Fan model	F2E190-230-DH	F2E220-230-DH	F2E225-230-DH
Rated working voltage V/Hz	230V AC 50/60Hz	230V AC 50/60Hz	230V AC 50/60Hz
Air flow rate, free blowing	570/620m³/h	860/1000m³/h	1200/1340m³/h
Air flow rate, Equipped with standard filter mat	1xLK6626.300: 456/496m³/h	1xLK6626.300: 688/540m³/h	1xLK6626.300: 960/1072m³/h
Rated current	0.26/0.34A	0.38/0.40A	0.60/0.88A
Power	58/75W	85/90W	120/180W
Noise level	62/64dBA	73/74dBA	69/71dBA
Temperature range	-10˚C~60˚C	-10˚C~60˚C	-10˚C~60˚C

DIMENSION (mm)

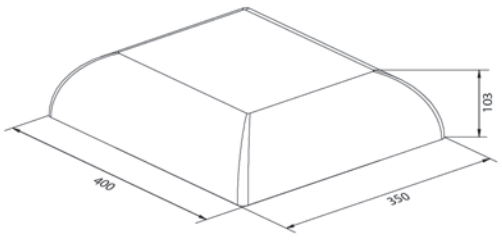

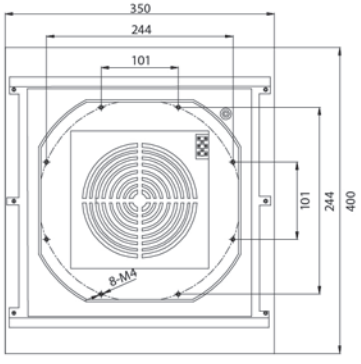

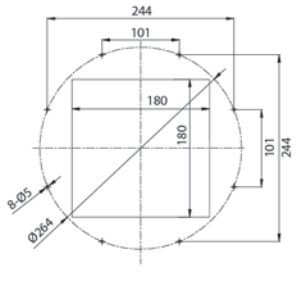

Opening size

F2E-DP series CABINET ROOF FAN





IP32 CE -20 +80 ℃

Installation conditions

- Small size and light weight
- Not occupying excess space
- Adopting high-performance, industrial grade ball bearing fans
- Completely reduce the internal temperature of the cabinet in a short period of time

SPECIFICATION

Fan model	F2E190-230-DP (115V,400V Customizable)	F2E220-230-DP (115V,400V Customizable)	F2E225-230-DP (115V,400V Customizable)
Rated working voltage V/Hz	230V AC 50/60Hz	230V AC 50/60Hz	230V AC 50/60Hz
Air flow rate, free blowing	570/620m³/h	860/1000m³/h	1200/1340m³/h
Air flow rate, Equipped with standard filter mat	1xLK6626.300: 456/496m³/h	1xLK6626.300: 688/720m³/h	1xLK6626.300: 960/1072m³/h
Rated current	0.28/0.31A	0.38/0.40A	0.60/0.88A
Power	58/75W	85/90W	120/180W
Noise level	59/61dBA	67/70dBA	68/71dBA
Temperature range	-10°C~60°C	-10°C~60°C	-10°C~60°C

DIMENSION (mm)

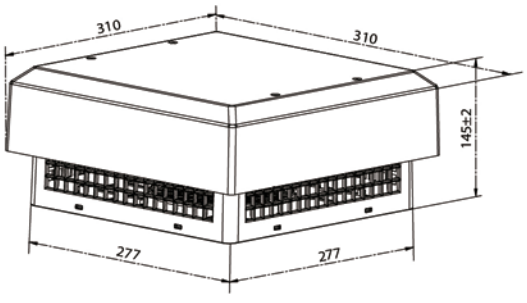

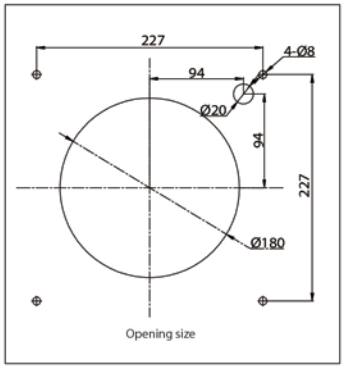

Data page for ref only ,
details & doubts please email: info@linkwell.org

CABINET ROOF FAN KTF-31 series



CHARACTERISTIC

- Large output range and high efficiency,
  Air volume output range: 570-1340m³/h
- Color: RAL 7035
- High protection level
- International certification and licensing
- IP32; IP54(filter pad)

Installation and maintenance are very simple
Innovative snap fasteners support flexible locking of fans from the outside or inside
Easy electrical connection through plugs
Easy to maintain, allowing users to quickly replace the filter pad of the fan

SPECIFICATION

Fan model	KTF3139.230 (115V,400V Customizable)	KTF3140.230 (115V,400V Customizable)	KTF3141.230 (115V,400V Customizable)
Rated working voltage V/Hz	230V AC 50/60Hz	230V AC 50/60Hz	230V AC 50/60Hz
Air flow rate, free blowing	570/620m³/h	860/1000m³/h	1200/1340m³/h
Air flow rate, Equipped with standard filter mat	1xLK6626.300: 456/496m³/h	1xLK6626.300: 688/720m³/h	1xLK6626.300: 960/1072m³/h
Rated current	0.28/0.31A	0.38/0.40A	0.60/0.88A
Power	58/75W	85/90W	120/180W
Noise level	59/61dBA	67/70dBA	68/71dBA
Temperature range	-10˚C~60˚C	-10˚C~60˚C	-10˚C~60˚C

DIMENSION (mm)

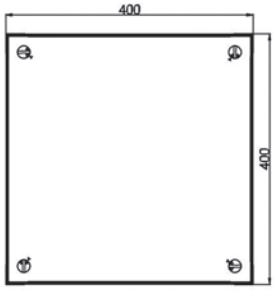

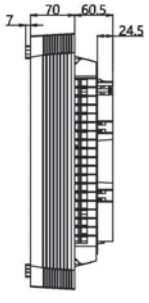

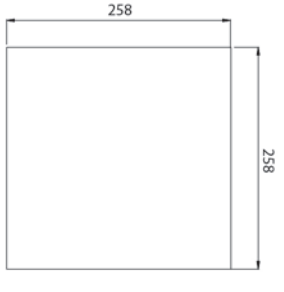

Opening size

KTF-21 series CABINET ROOF FAN





IP32 CE -25 +55

Installation conditions

- Installation and maintenance are very simple
- Innovative snap fasteners support flexible locking of fans from the outside or inside
- Easy electrical connection through plugs
- Easy to maintain, allowing users to quickly replace the filter pad of the fan

SPECIFICATION

Fan model	KTF21.230 (115V,400V Customizable)	KTF21.048	KTF20.230 (115V,400V Customizable)
Rated working voltage V/Hz	230V AC 50/60Hz	48V DC	230V AC 50/60Hz
Air flow rate, free blowing	570/620m³/h	570m³/h	440/480m³/h
Air flow rate, Equipped with standard filter mat	1xLK6626.300: 456/496m³/h	1xLK6626.300: 456m³/h	1xLK6626.300: 352/384m³/h
Rated current	0.28/0.31A	1.0A	0.27/0.28A
Power	58/75W	51W	56/62W
Noise level	59/61dBA	33dBA	58/61dBA
Temperature range	-10˚C~60˚C	-10˚C~60˚C	-10˚C~60˚C

DIMENSION (mm)

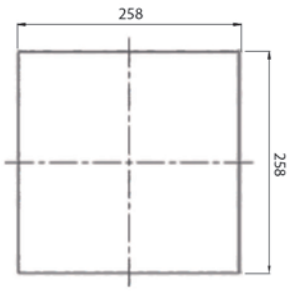

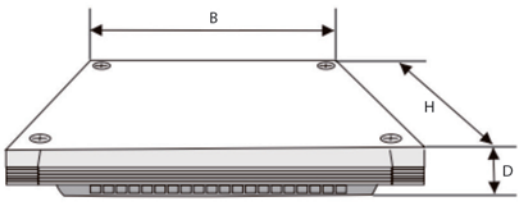

Data page for ref only ,
details & doubts please email: info@linkwell.org

LINKWELL ELECTRIC

CABINET ROOF FAN REF600 series





IP43 CE -10 +60°C

Installation conditions

- Quick installation: simply snap it into place without screws
- Adjustable buckle fits cabinets with thicknesses ranging from 1.5~3.5mm
- Rated IP43; includes standard G3-grade filter cotton
- Filter cotton can be replaced quickly without tools-just turn the top knob
- AC voltage is standard; DC voltage is available upon request

SPECIFICATION

Fan model	REF600.230	REF600.115	REF600.024
Rated working voltage V/Hz	230V AC 50/60Hz	230V AC 50/60Hz	24V DC
Air flow rate, free blowing	480/520m³/h	480/520m³/h	500m³/h
Air flow rate, Equipped with standard filter mat	1xLK6626.300: 384/416m³/h	1xLK6626.300: 384/416m³/h	1xLK6626.300: 544m³/h
Rated current	0.44/0.48A	0.88/0.96A	0.80A
Power	64/76W	64/76W	19.2W
Noise level	48/52dBA	48/52dBA	48/52dBA
Temperature range	-10°C~60°C	-10°C~60°C	-10°C~60°C

DIMENSION (mm)

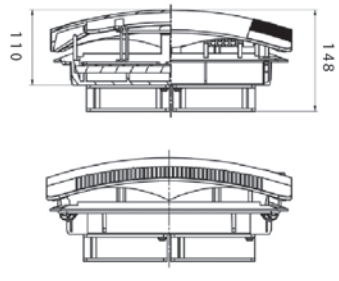

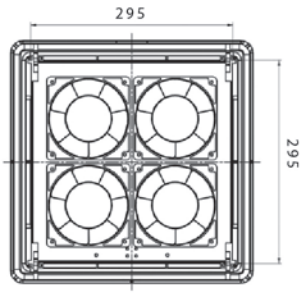

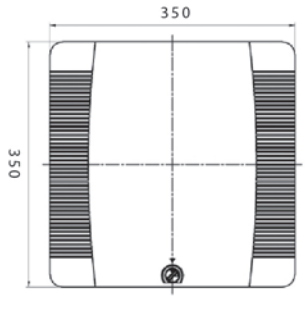

REF700/1400 series CABINET ROOF FAN





IP32 CE -20 +80

Characteristic

- Quick installation, can be directly buckled without the need for screws to fix
- Adjustable buckle, suitable for cabinets with different thicknesses of 1.5-3.5mm
- IP32, standard g3 grade filter cotton
- Quickly replace the filter cotton without the need for tools, directly open the top knob
- AC voltage is standard as a standard configuration

SPECIFICATION

Fan model	REF700.230 (115V,400V Customizable)	REF1400.230 (115V,400V Customizable)
Rated working voltage V/Hz	230V AC 50/60Hz	230V AC 50/60Hz
Air flow rate, free blowing	550/600m³/h	1150/1350m³/h
Air flow rate, Equipped with standard filter mat	1xLK6626.300: 380/410m³/h	1xLK6626.300: 750/950m³/h
Rated current	0.30/0.35A	0.55/0.65A
Power	55/65W	110/150W
Noise level	62/65dBA	68/71dBA
Temperature range	-20°C~80°C	-20°C~80°C

DIMENSION (mm)

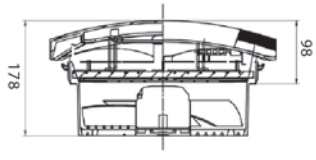

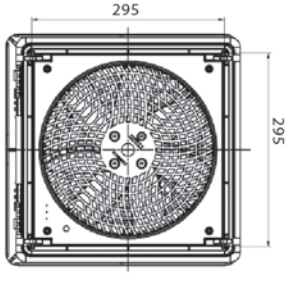

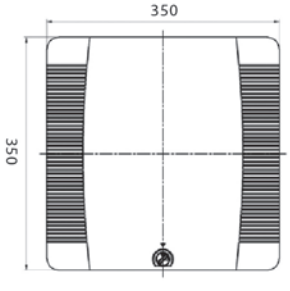

Data page for ref only ,
details & doubts please email: info@linkwell.org

LINKWELL ELECTRIC

CABINET ROOF FAN
(stainless steel)

PTF series



PTF 29387



PTF 378119

IP32 CE -25 +55 ℃

SPECIFICATION

Fan model	PTF 29387 (115V,400V Customizable)	PTF 378119 (115V,400V Customizable)
Rated working voltage V/Hz	230V AC 50/60Hz	230V AC 50/60Hz
Air flow rate, free blowing	440/480m³/h	1200/1340m³/h
Air flow rate, Equipped with standard filter mat	1xLK6626.300: 352/384m³/h	1xLK6626.300: 960/1072m³/h
Rated current	0.27/0.28A	0.60/0.88A
Power	56/62W	120/180W
Noise level	58/61dBA	68/71dBA
Temperature range	-10°C~60°C	-10°C~60°C

DIMENSION (mm)

PTF 29387

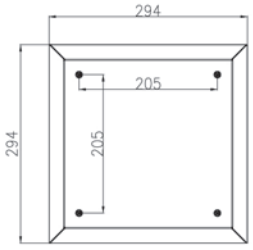

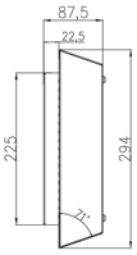

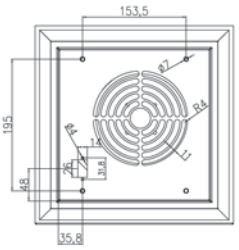

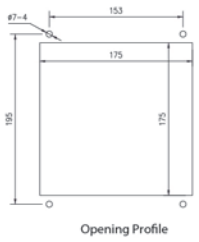

Opening Profile

PTF 378119

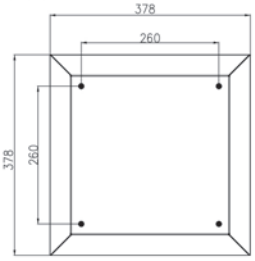

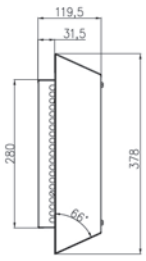

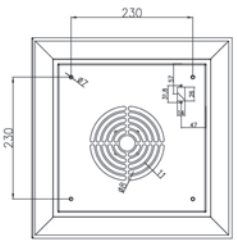

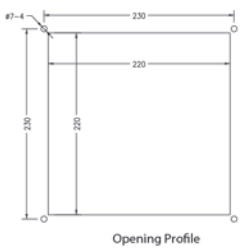

Opening Profile

PTF series

CABINET ROOF FAN

(stainless steel)



PTF 398150



PTF 36890

IP32 CE -25 +55 °C

SPECIFICATION

Fan model	PTF 398150 (115V,400V Customizable)	PTF 36890 (115V,400V Customizable)
Rated working voltage v/hz	230V AC 50/60Hz	230V AC 50/60Hz
Air flow rate, free blowing	1200/1340m³/h	700/750m³/h
Air flow rate, Equipped with standard filter mat	1xLK6626.300: 960/1072m³/h	1xLK6626.300: 560/600m³/h
Rated current	0.60/0.88A	0.25/0.27A
Power	120/180W	31/33W
Noise level	68/71dBA	65/67dBA
Temperature range	-10°C~60°C	-10°C~60°C

DIMENSION (mm)

PTF 398150

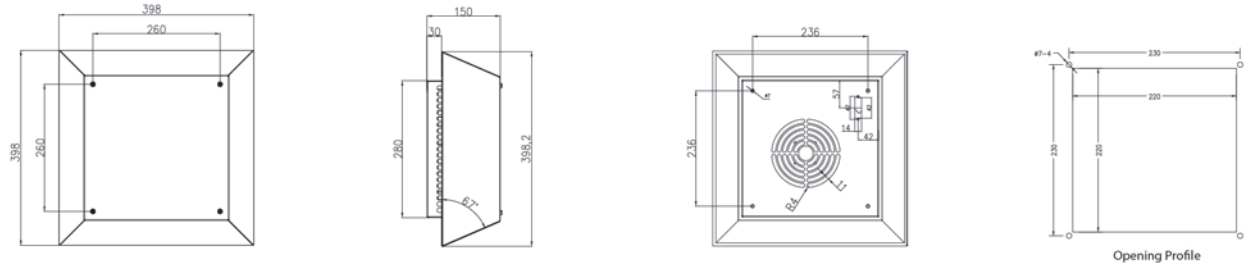

PTF 36890

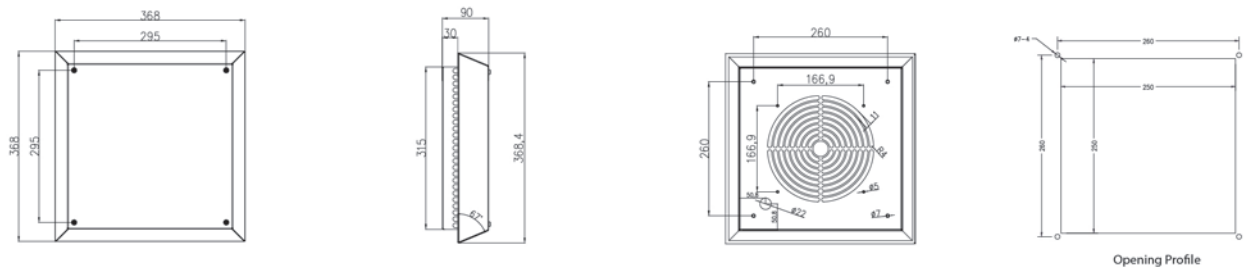

Data page for ref only ,
details & doubts please email: info@linkwell.org

CABINET ROOF FAN PTF series





Customizable stainless steel material

IP32 CE -10 +65 ℃

Installation Conditions

- The ambient temperature should be lower than the required temperature inside the control cabinet, when there is insufficient space in the cabinet to install a side mounted filter fan, top mounted fans can be considered
- The cabinet top mounted fan extracts the hot air from the top of the control cabinet while dissipating the heat inside the cabinet outside,
- The use of centrifugal fans can not only avoid the formation of vortex like whirlwinds in the discharge of ordinary shielded magnetic pole fans, but also reduce the
- The noise generated by low air friction with each other

SPECIFICATION

Fan model	PTF60260	PTF60290
Rated working voltage V/Hz	230V AC 50/60Hz	115V AC 50/60Hz
Air flow rate, free blowing	2500/2900m³/h	2500/2900m³/h
Rated current	0.8/0.9A	2.0/2.3A
Power	165/200W	180/240W
Noise level	66/69dBA	66/69dBA
Temperature range	-10°C~65°C	-10°C~65°C

DIMENSION (mm)

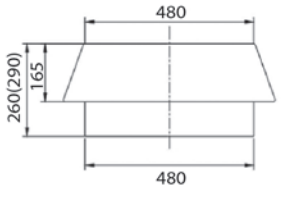

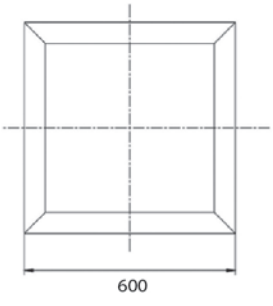

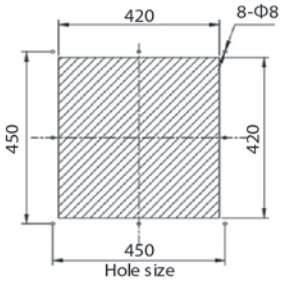

Electrical wiring diagram

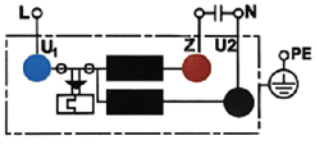

KRF series

CABINET ROOF FAN





Installation conditions

- The ambient temperature should be lower than the required temperature inside the control cabinet
  When there is insufficient space in the cabinet to install a side mounted filter fanConsider using a top mounted fan
- The cabinet mounted fan extracts the hot air from the top of the control cabinet while dissipating the heat inside the cabinet outside, protecting the electrical components
  inside the control cabinet from operating within a controllable temperature range. And it does not occupy internal space
- Centrifugal fans are mainly capable of discharging high heat loads with maximum efficiency. The use of centrifugal fans can not only avoid the formation of eddy currents
  in the discharge of ordinary shielded magnetic pole fans, but also reduce the noise generated by air friction

SPECIFICATION

Fan model	KRF 670 (115V,400V Customizable)	KRF 1410 (115V,400V Customizable)
Rated working voltage V/Hz	230V AC 50/60Hz	230V AC 50/60Hz
Air flow rate, free blowing	570/620m³/h	1200/1340m³/h
Air flow rate, Equipped with standard filter mat	1xLK6626.300: 456/496m³/h	1xLK6626.300: 960/1072m³/h
Rated current	0.28/0.31A	0.60/0.88A
Power	58/75W	120/180W
Noise level	59/61dBA	68/71dBA
Temperature range	-10°C~60°C	-10°C~60°C

DIMENSION (mm)

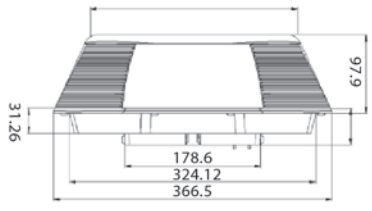

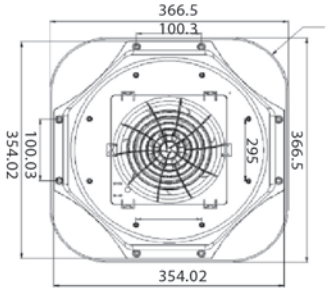

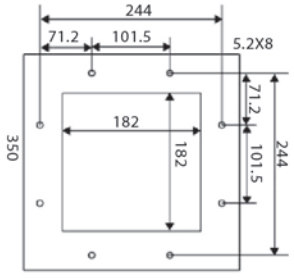

Data page for ref only ,
details & doubts please email: info@linkwell.org

LINKWELL ELECTRIC

CABINET ROOF FAN RCF480 series



Characteristic

- Compact 1U design with low noise; can be installed anywhere on a standard 482.6mm (19-inch) plane
- Can be used with a front exhaust outlet filter to create a chimney effect for optimal airflow

IP33 CE -20 +55 ℃

SPECIFICATION

Model No.	RCF480-230	RCF480-115	RCF480-024
Dimensions (WxHxD)	484 x 44.5 x 205.5mm		
Air flow parameters			
Non resistance air volume	408/450m³/h		650m³/h
Noise level (DIN 45 635)	48/52dB(A)	48/52dB(A)	48dB(A)
Duty cycle	100%		
Electrical data:			
Fan motor	Capacitor motor		Dcmotor
Rated voltage	230VAC	115VAC	24VDC
Range of operation	220-240V	100-125V	20-26VDC
Frequency	50Hz/60 Hz	50Hz/60 Hz	-
Powerconsumption	57/54W	57/54W	14.4W
Rated current	0.36/0.33 A	0.72/0.66 A	0.60 A

DIMENSION (mm)

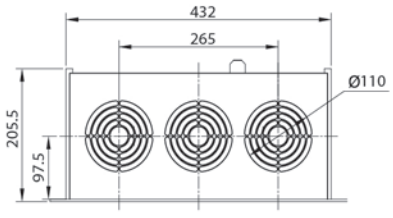

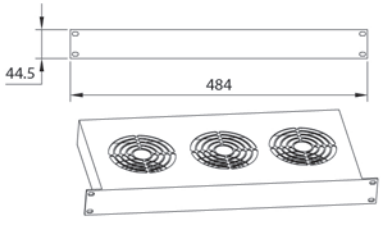

Cutout size diagram

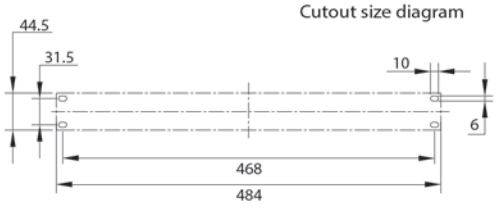

PRESSURE COMPENSATION DEVICE

DA 084

DIMENSION (mm)

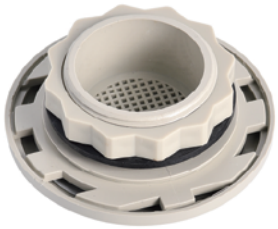



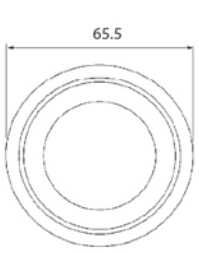

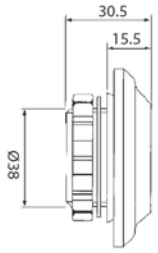

IP55 CE UL94 V-0 -45 +70 ℃

Model	Overall dimension	Installation mode	Ventilation interface	Assembly position	Operation/storagetem perature	Weight
DA 084	65.5x30.5mm	PG 29 threaded with nuts	~7cm²	Vertical	-45℃~+70℃	31g

DA 284

DIMENSION (mm)





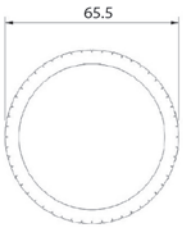

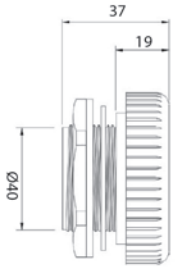

IP66 CE UL94 V-0 -35 +70 ℃

Model	Overall dimension	Installation mode	Torque	Shell depth	Air permeability	Operation/storagetem perature	Weight
DA 284	60x37mm	M40x1.5 threaded with nuts	5Nm (Max.10Nm)	~16mm	1200L/ h, 70mbar per minute	-45℃~+70℃	45g

LK 705

DIMENSION (mm)





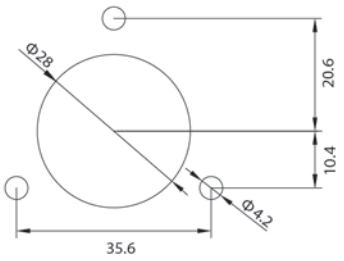

IP54 CE UL94 V-0 -45 +70 ℃

Feature	Unit	Feature
Material	-	Self extinguishing abs
Color	-	Grey (ral7035), black (ral9005)
Fixed	-	Screw with sealing ring
Size	mm	70x50x21
Weight	kg	Zero point zero three

Data page for ref only ,
details & doubts please email: info@linkwell.org